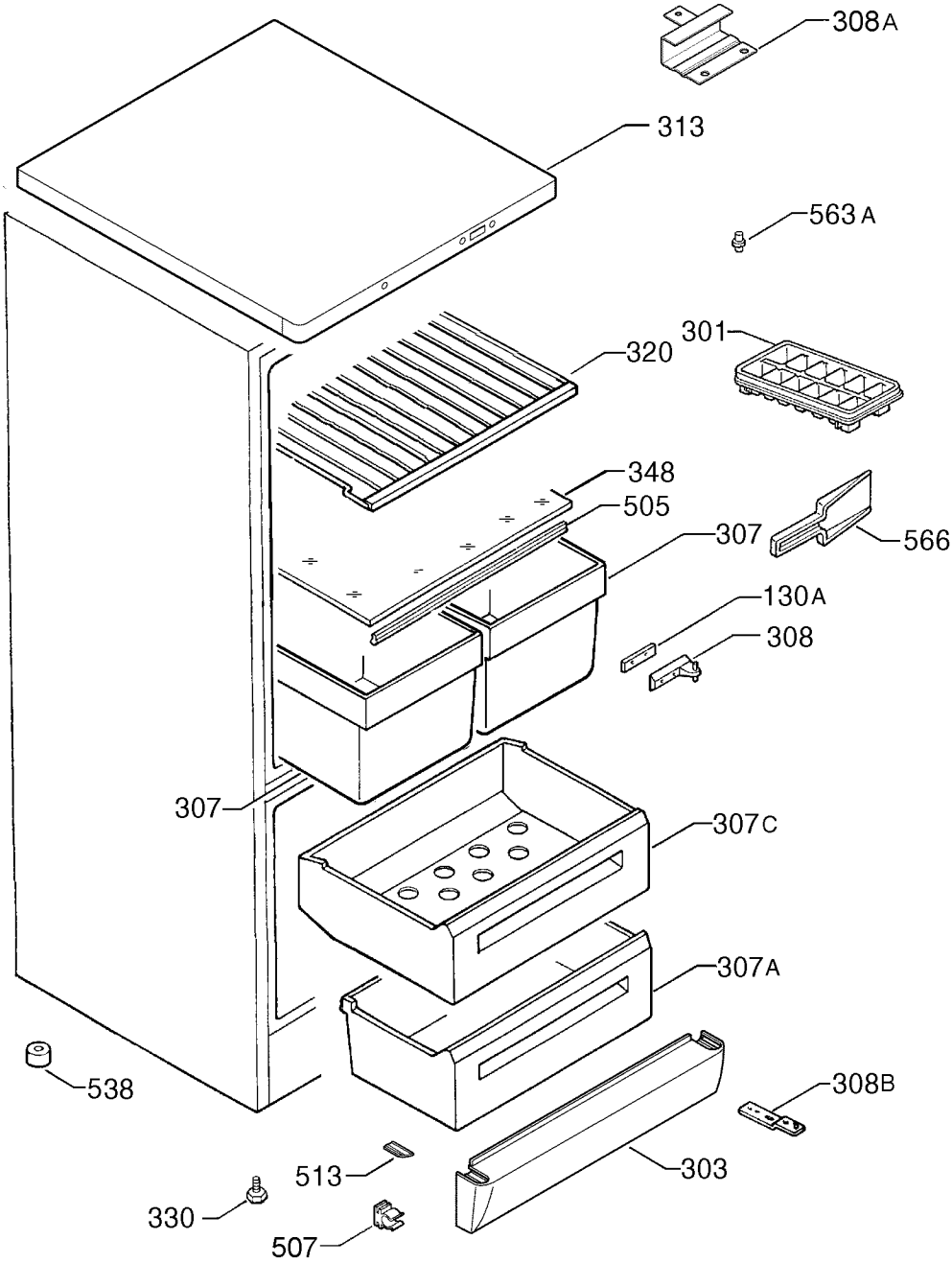

P09253018028