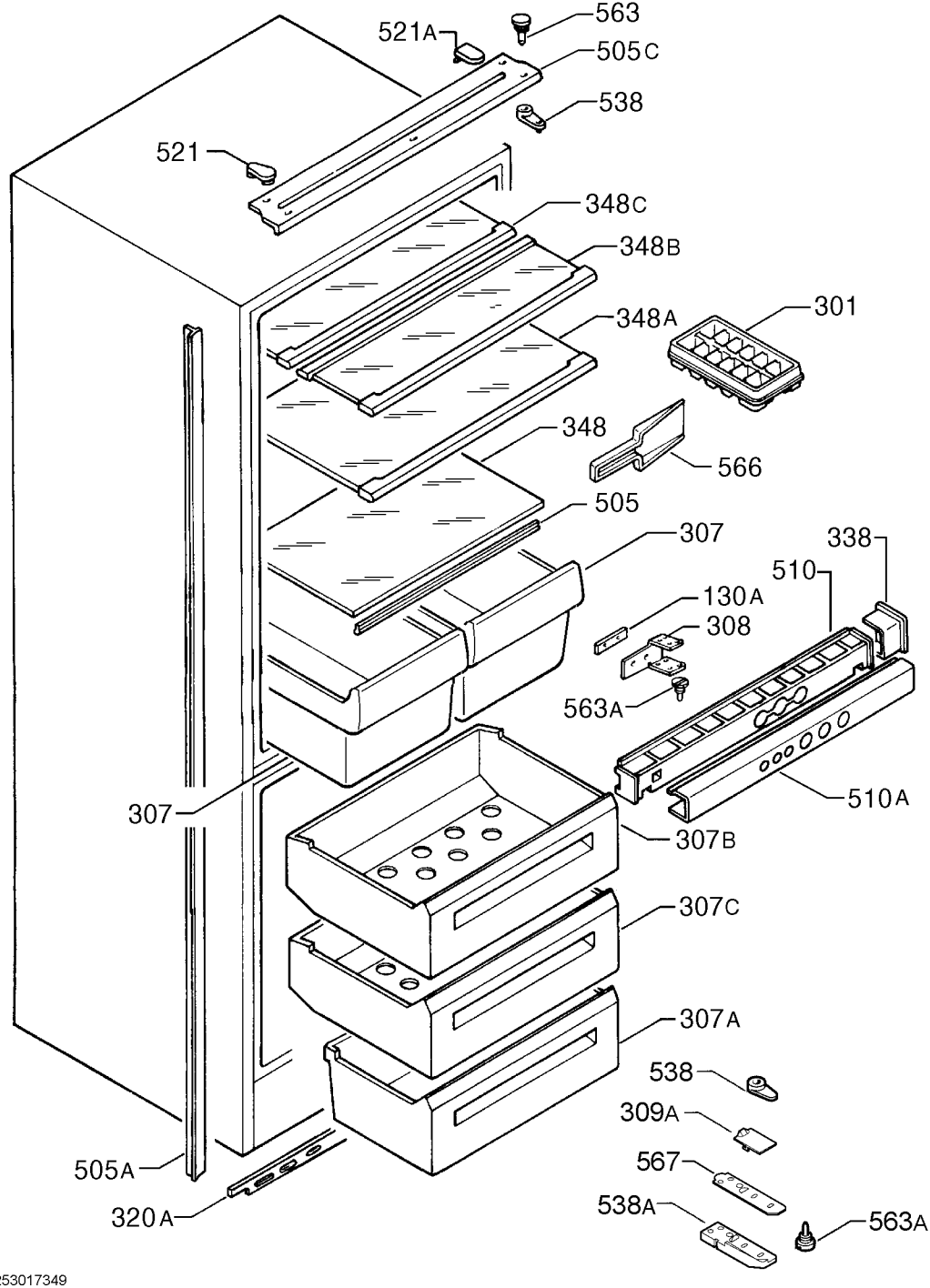

P09253017349