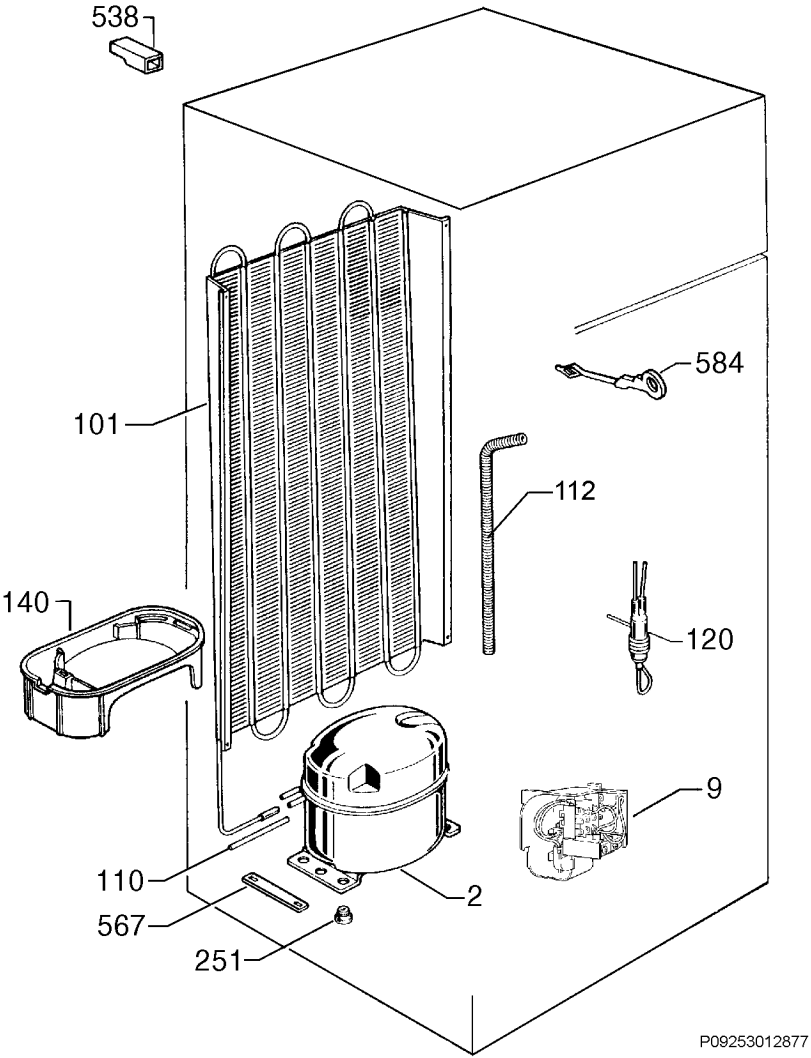
538
584
101
112
140
120
9
110
2
567
251
P09253012877