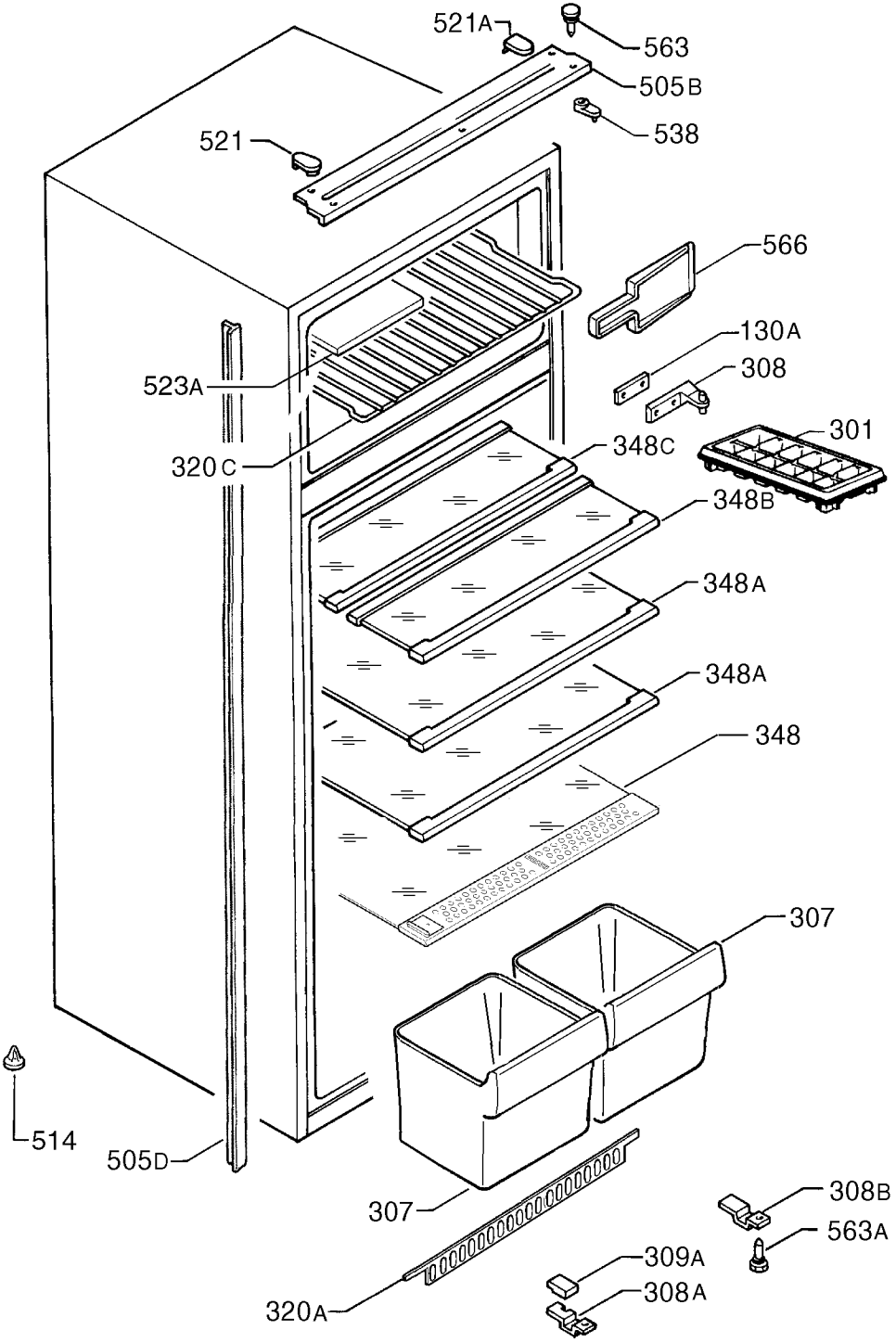

P09253009880