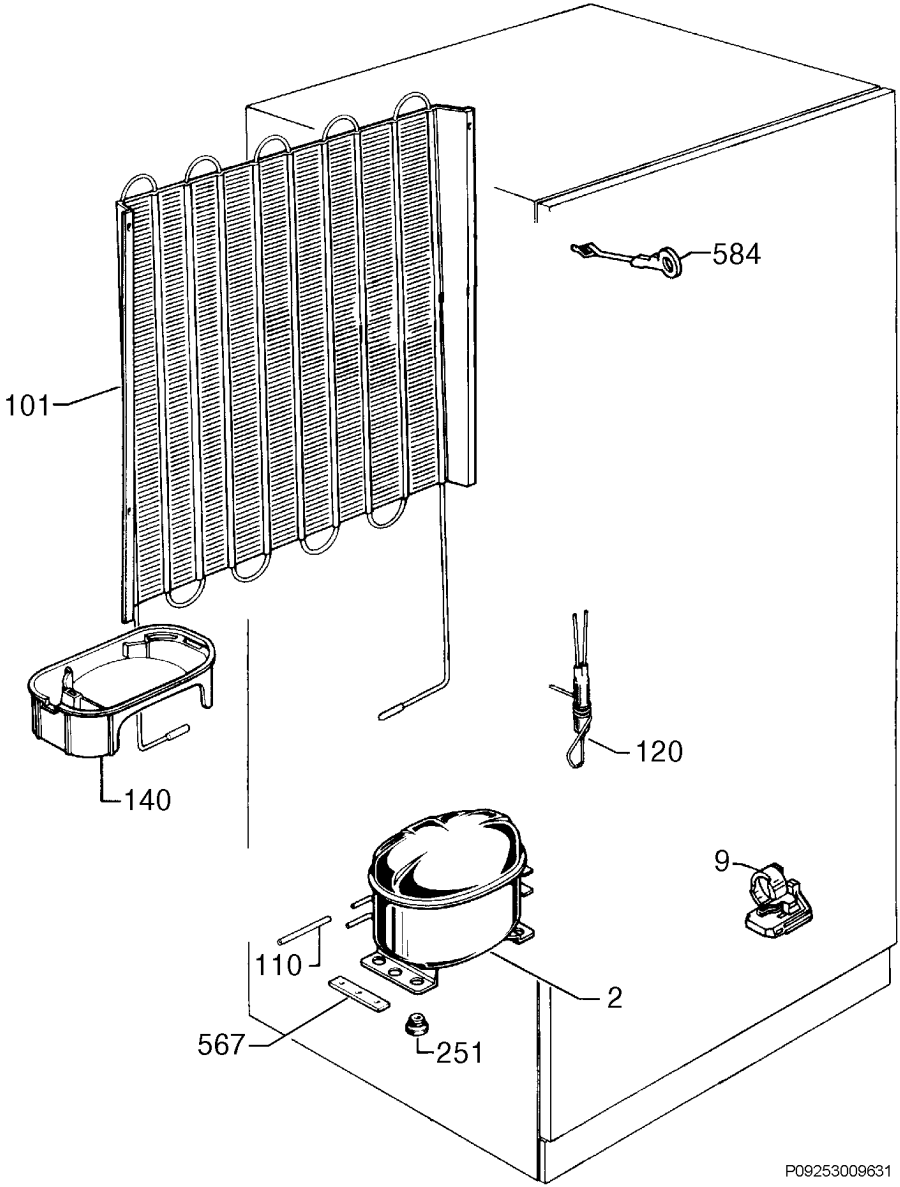
584
101
120
140
9
110
2
567
251
P09253009631