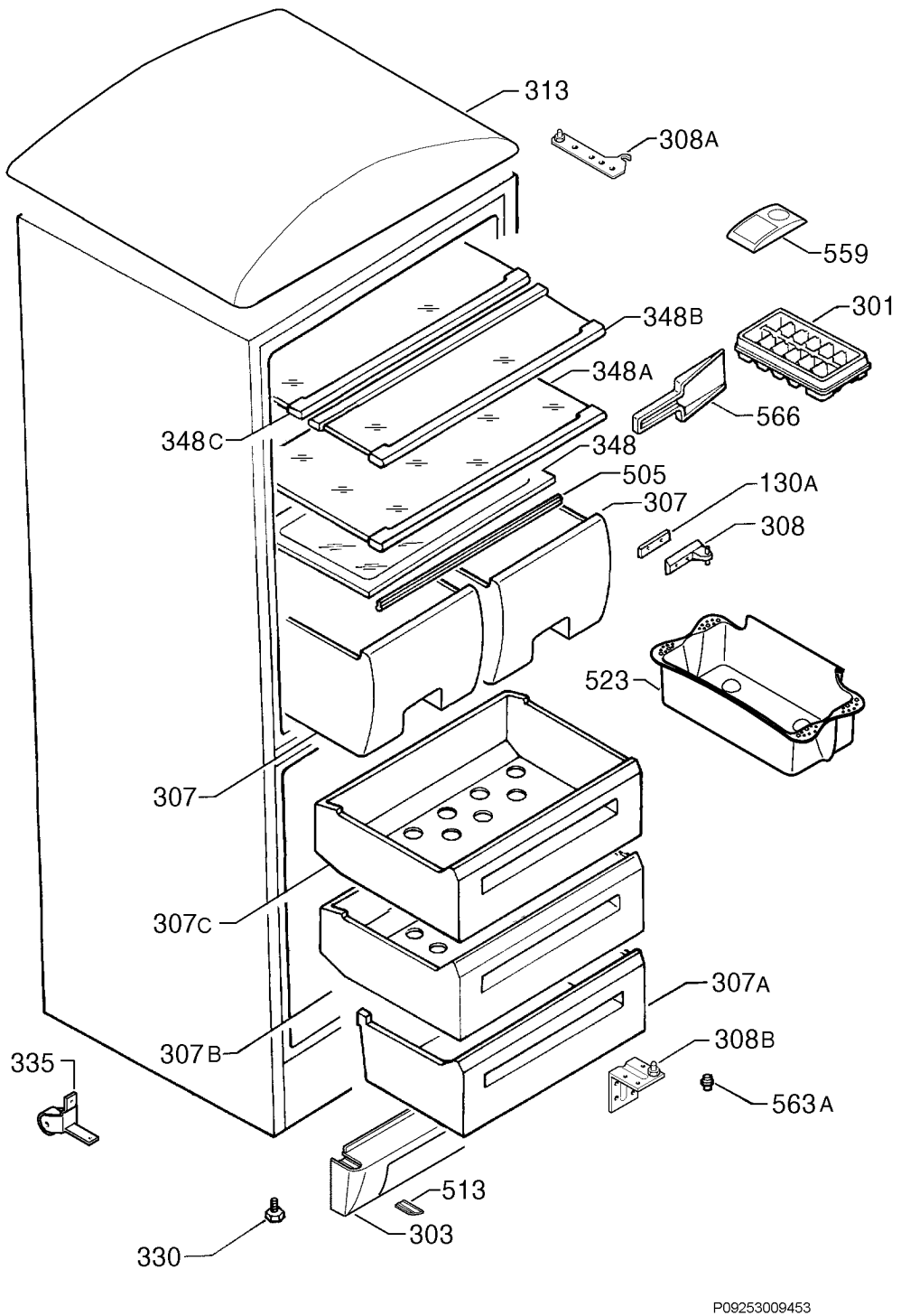

P09253009453