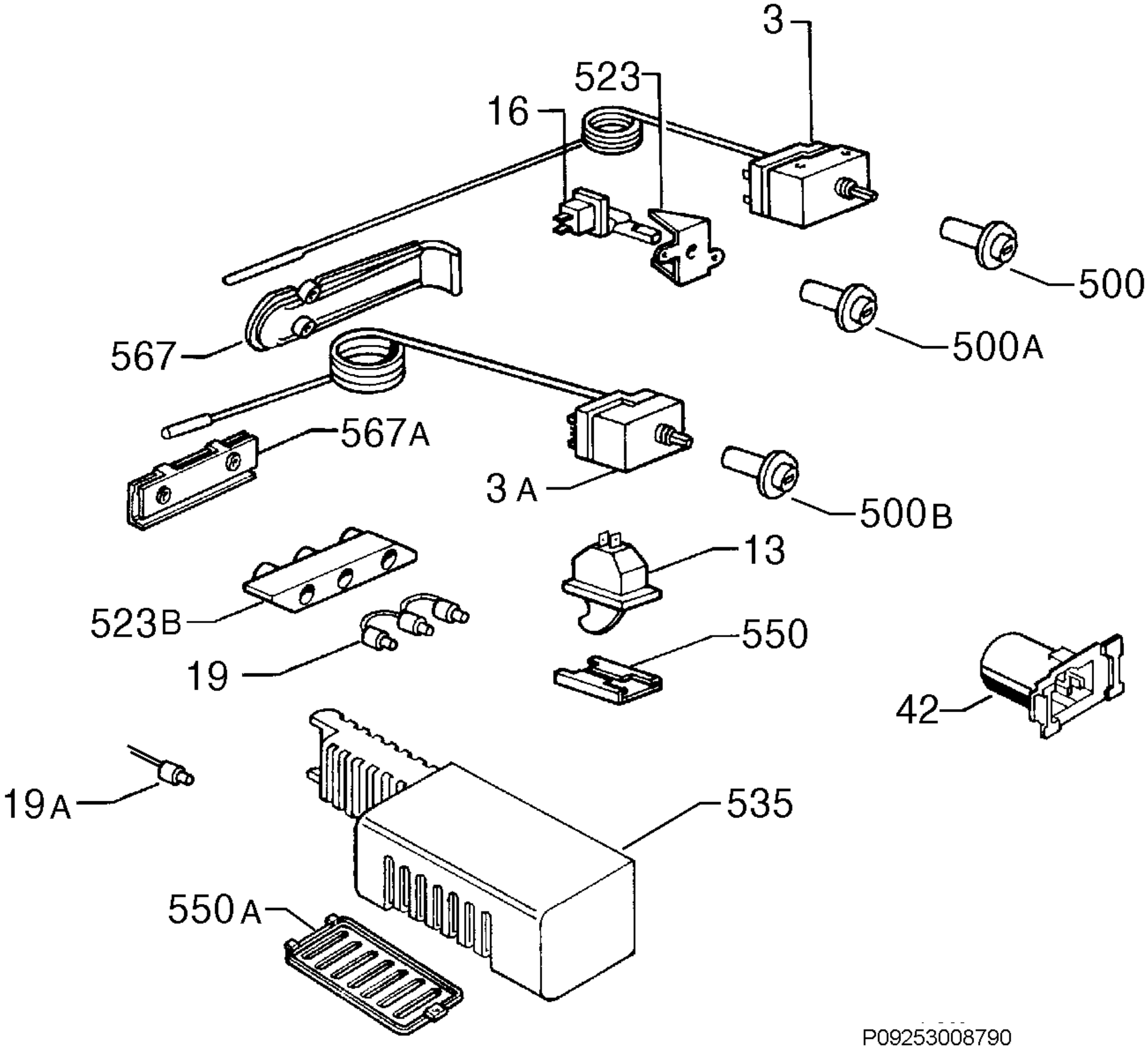

P09253008790