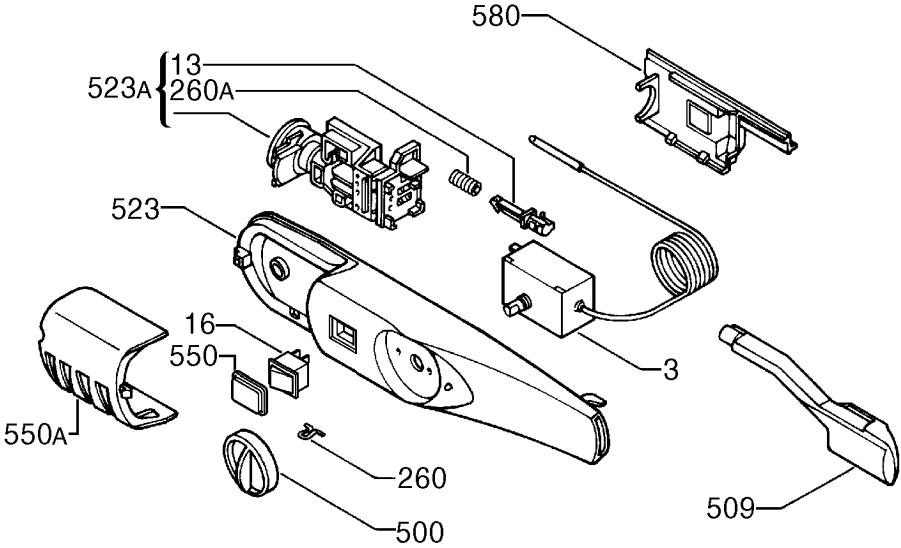

9253001410