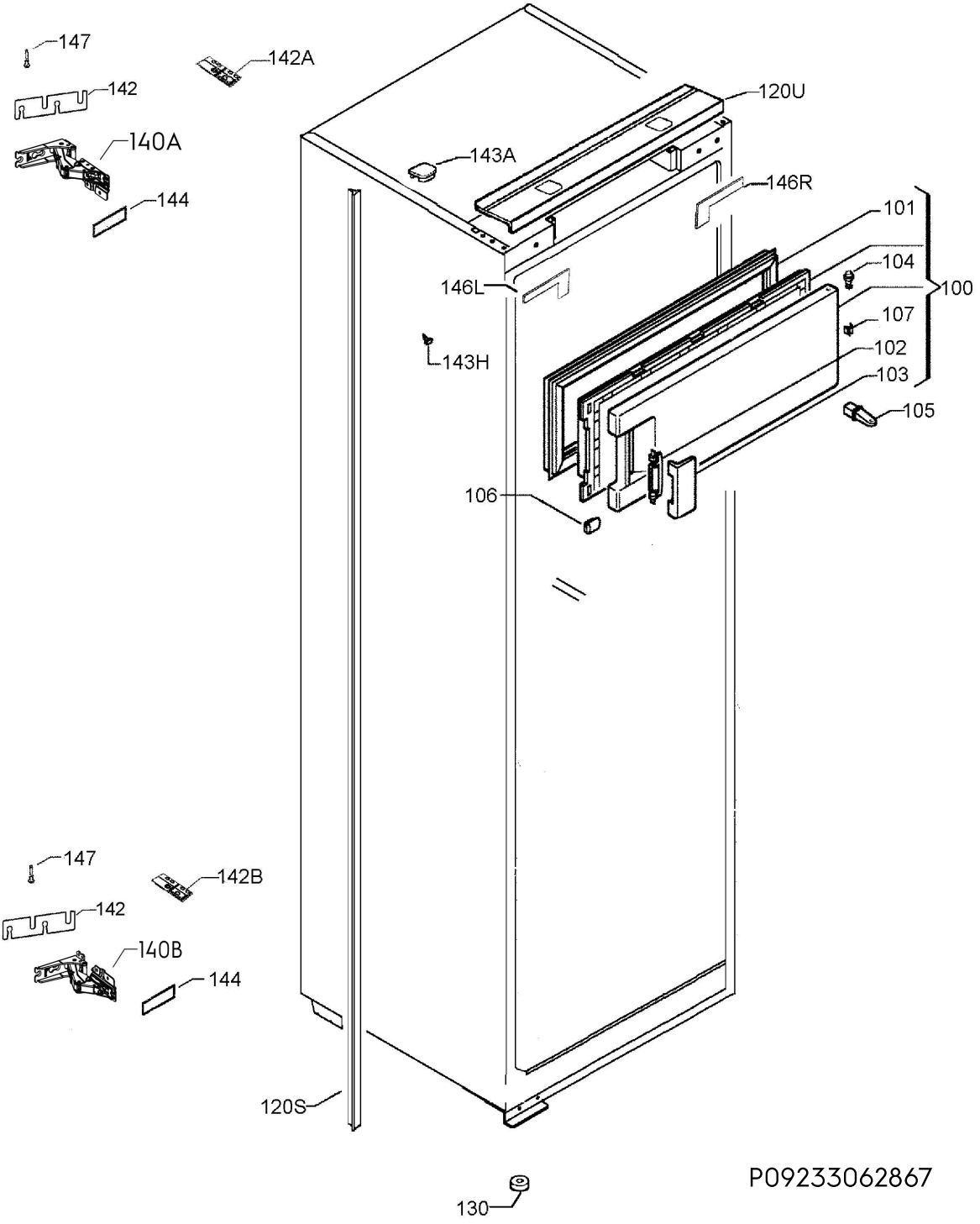

P09233062867