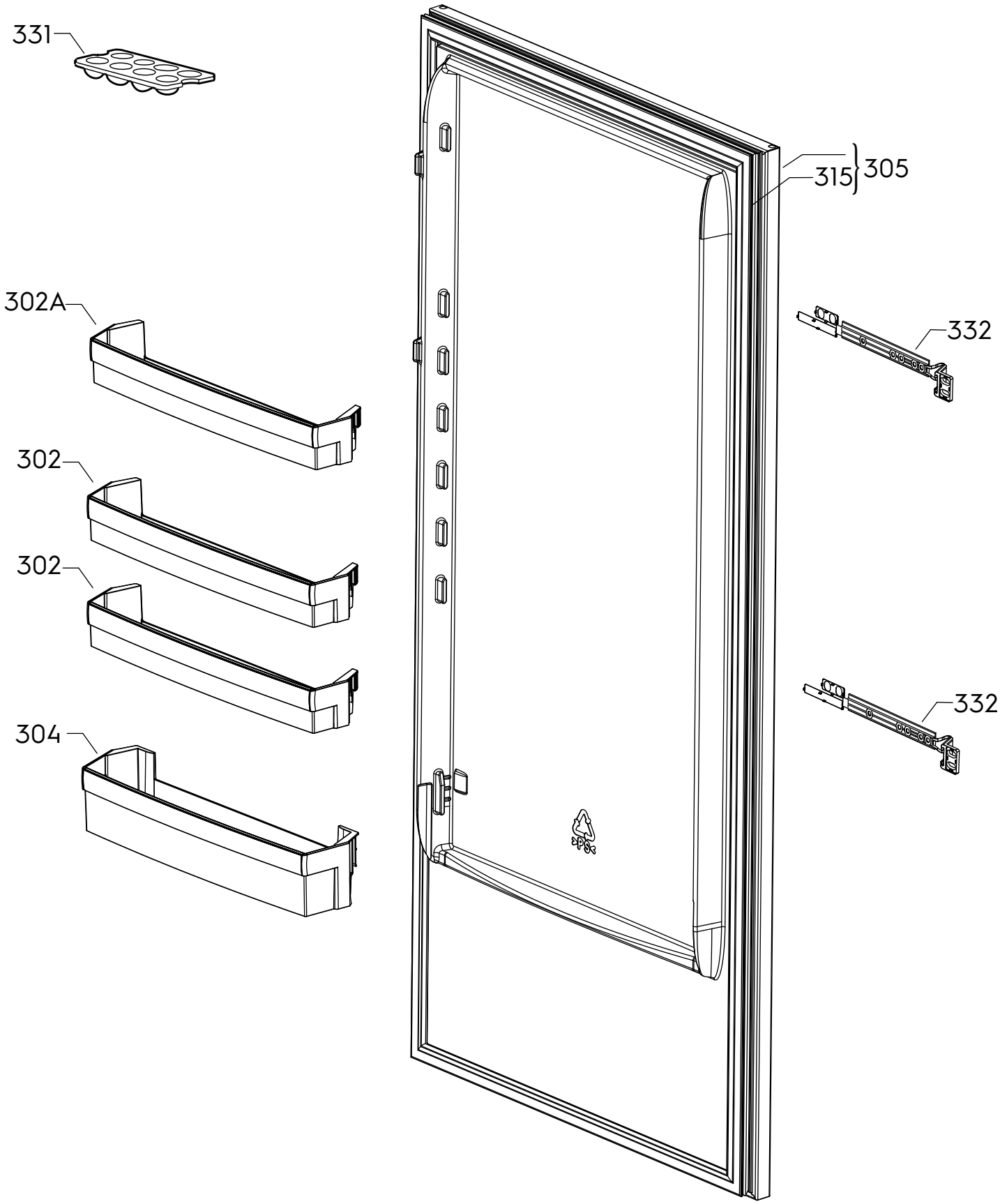

P09233058412