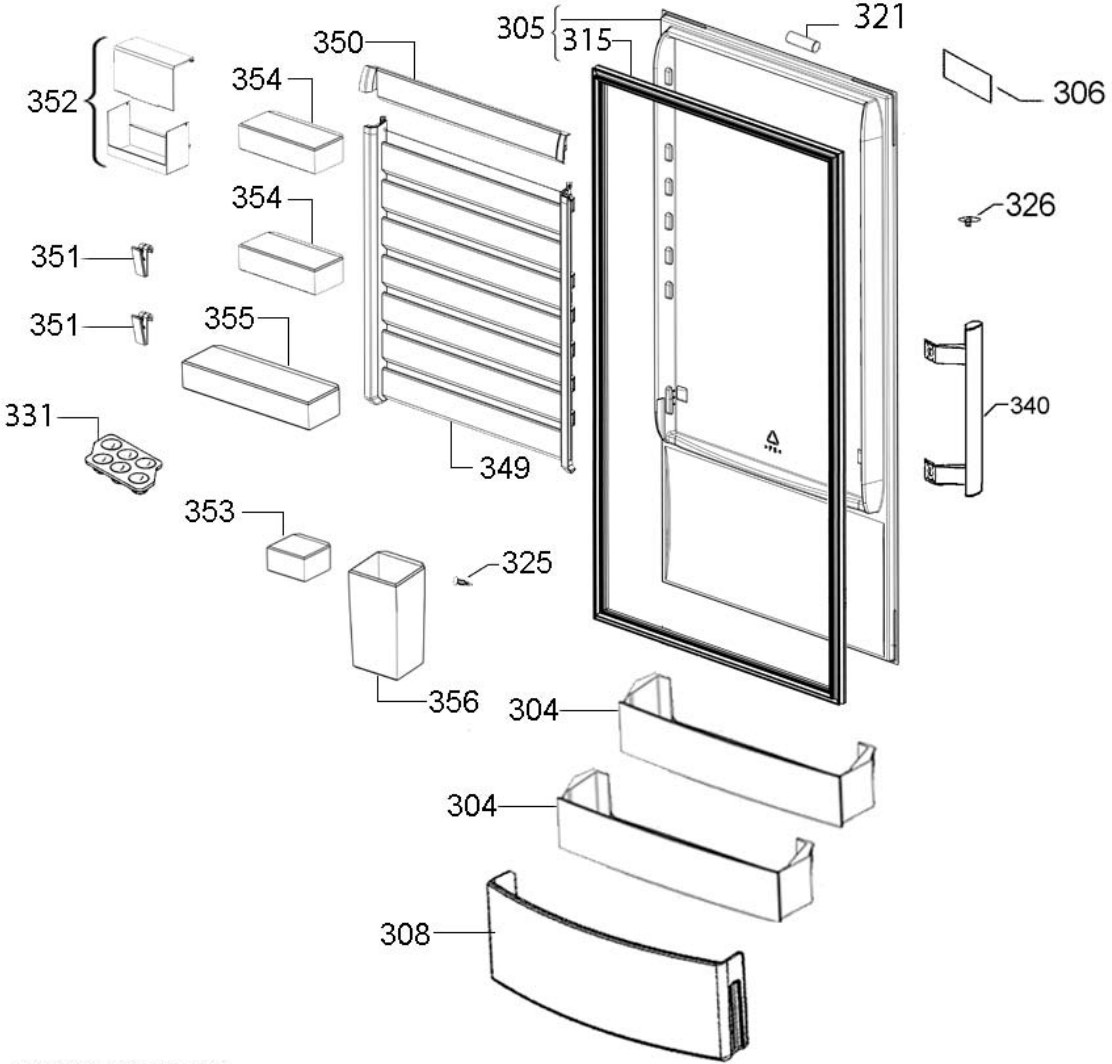

P09233051710