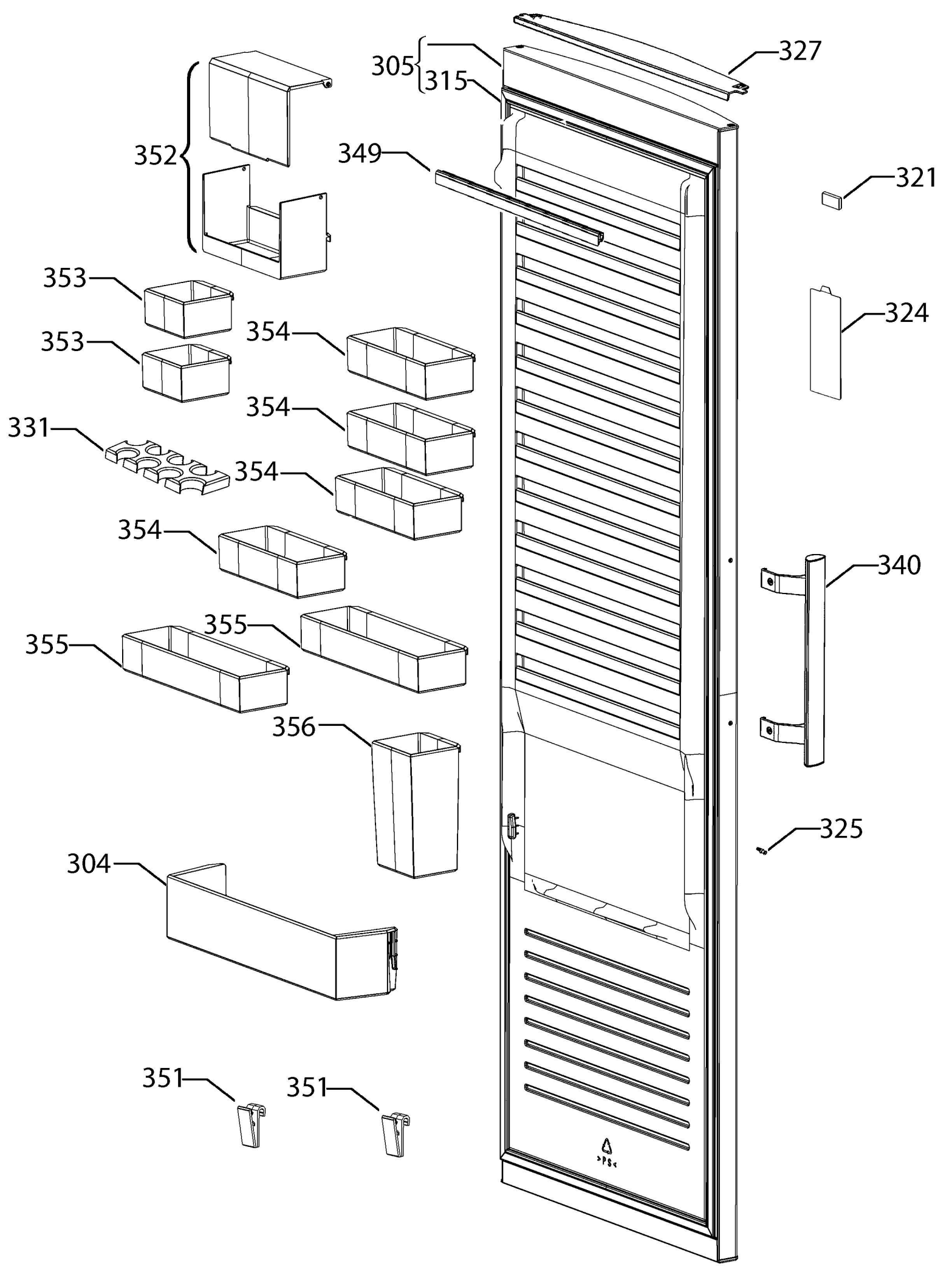

P09233051410