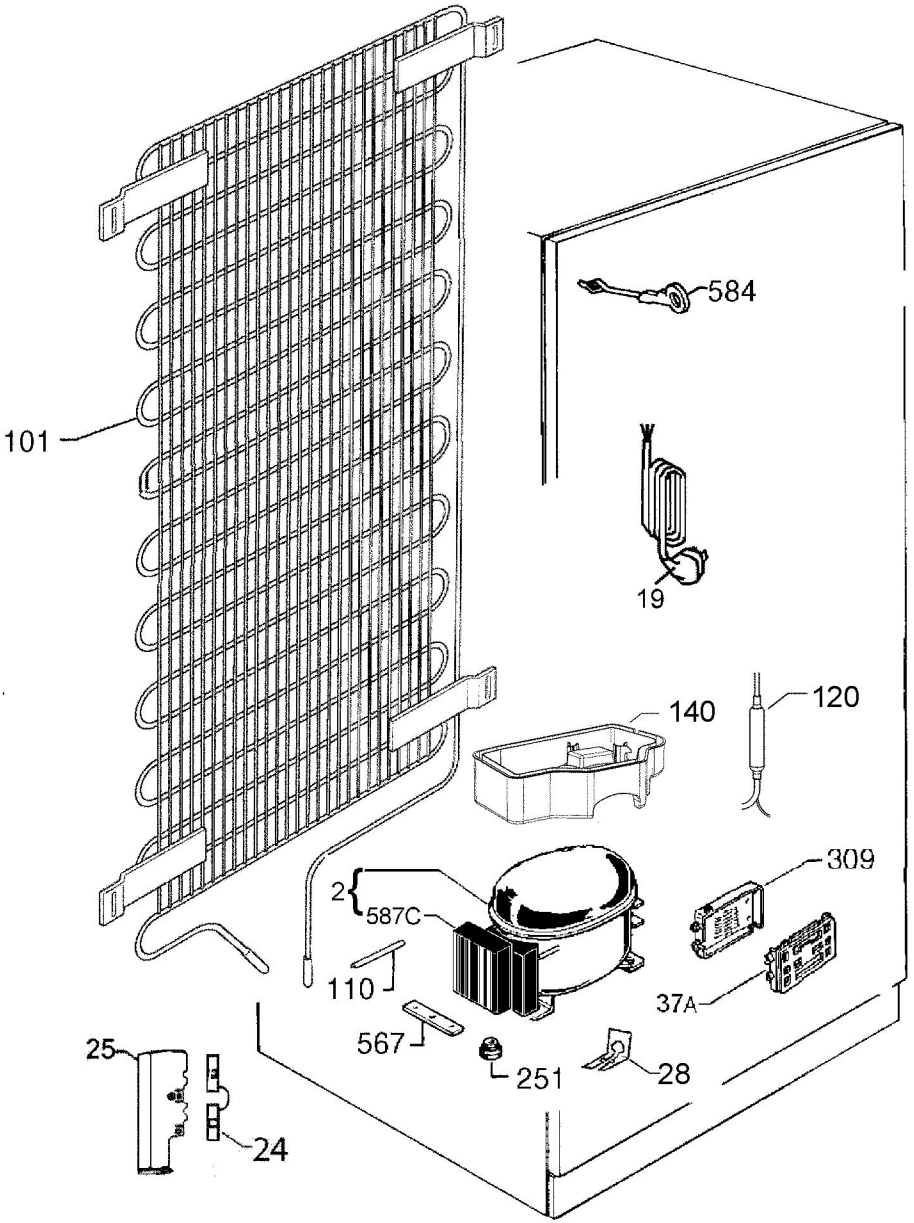

P09233046154