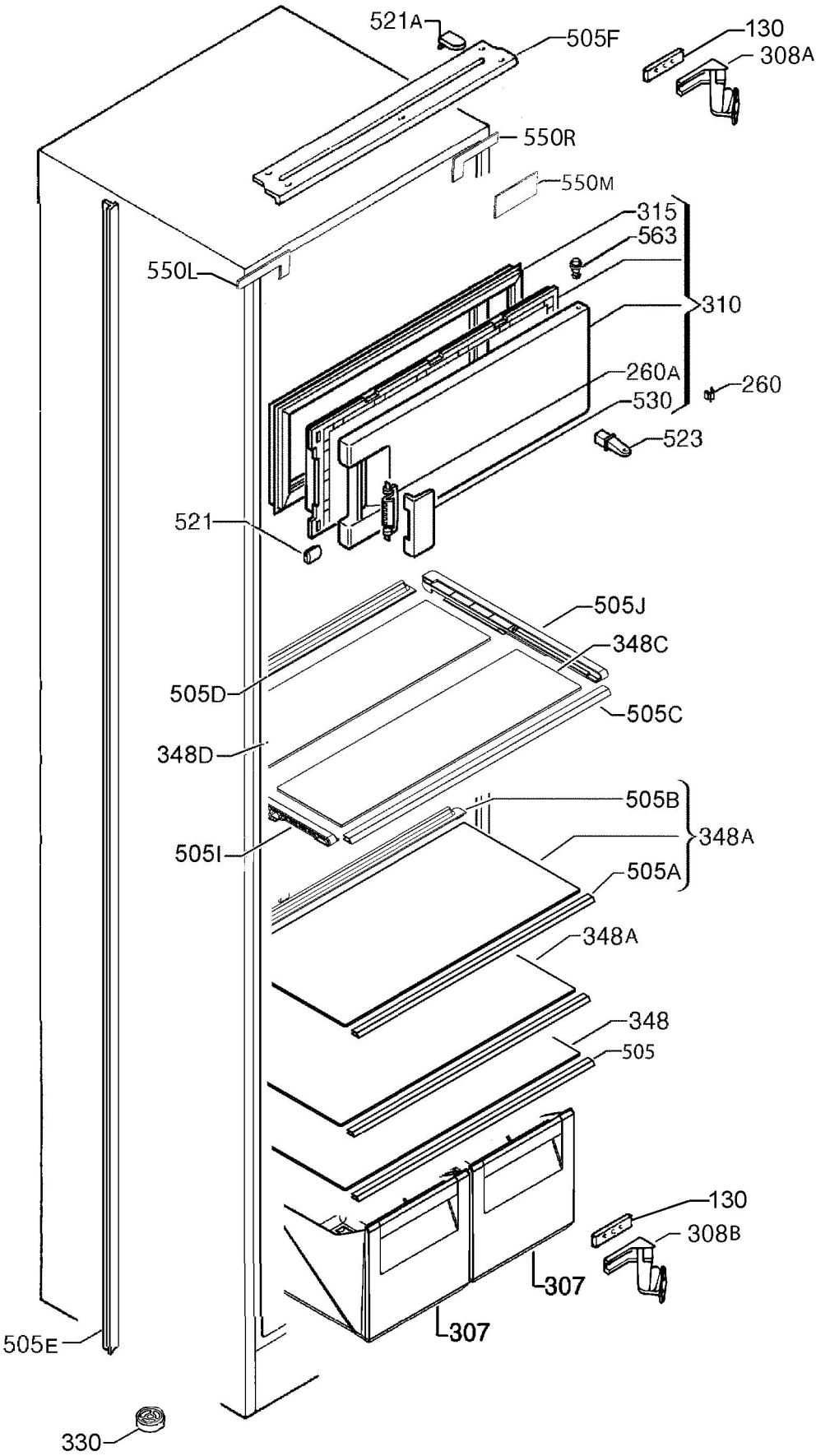

P09233045767