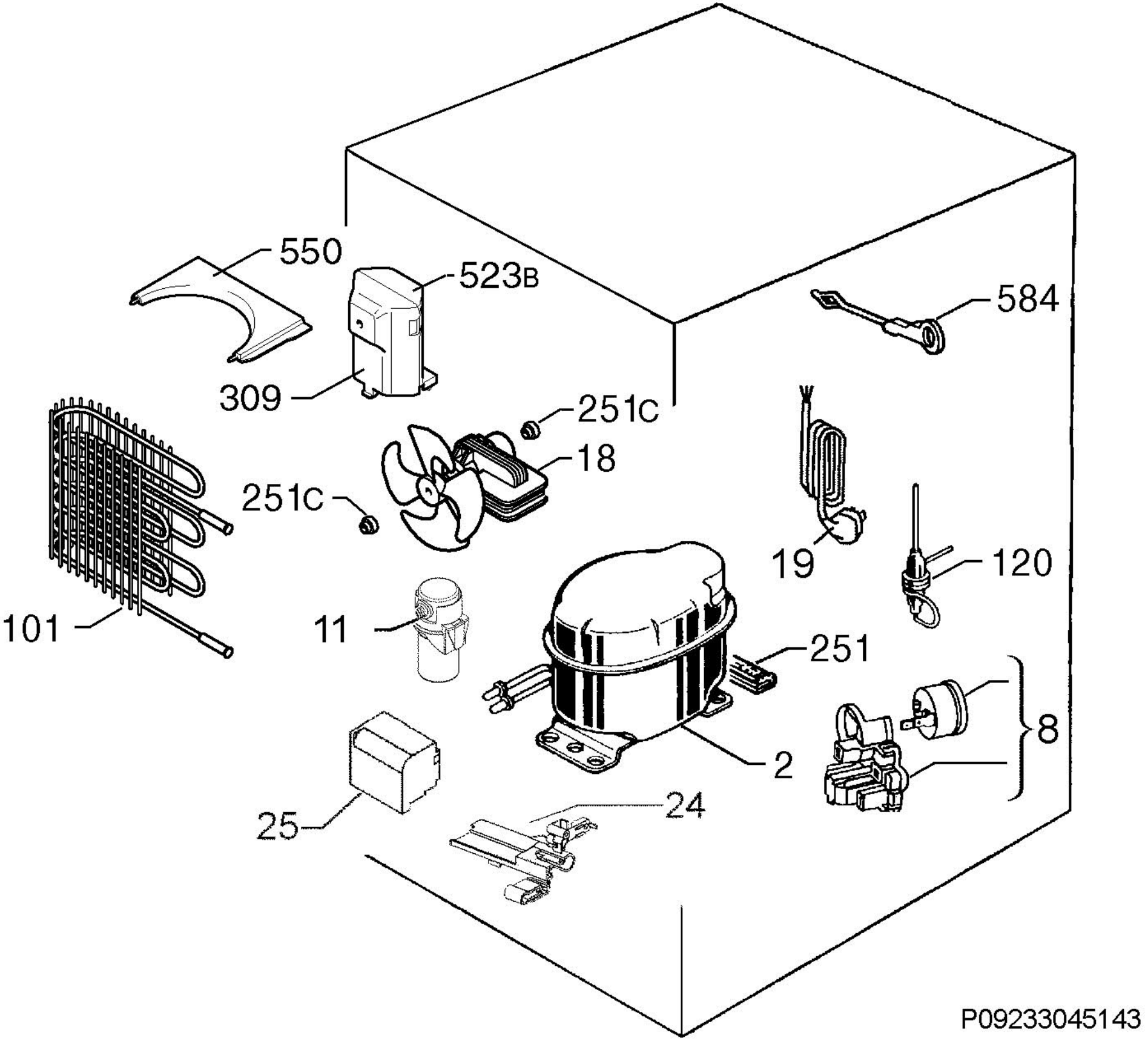
550
523B
584
309
251C
18
251C
19
120
101
11
251
8
2
25
24
P09233045143