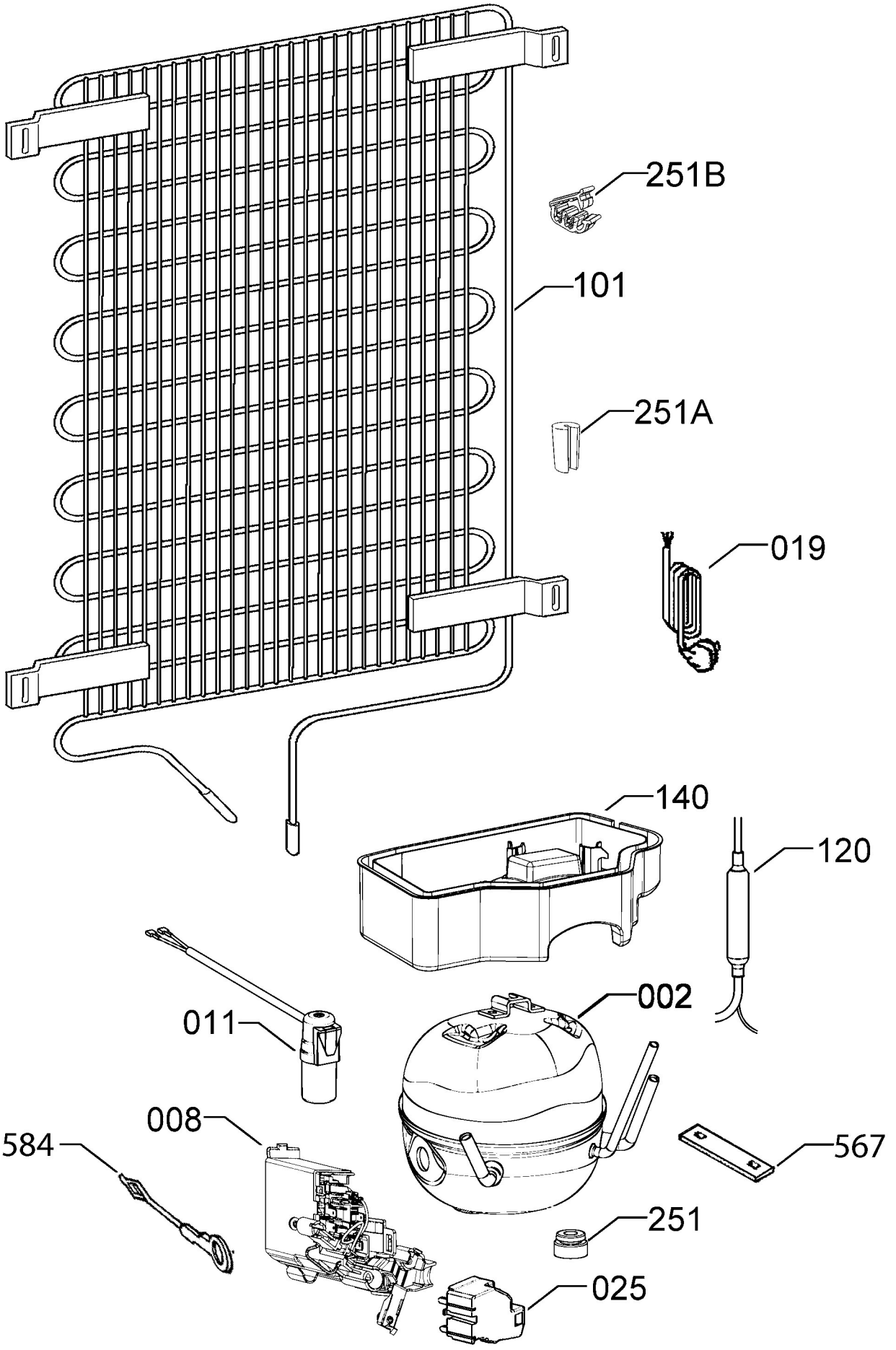

P09233041708