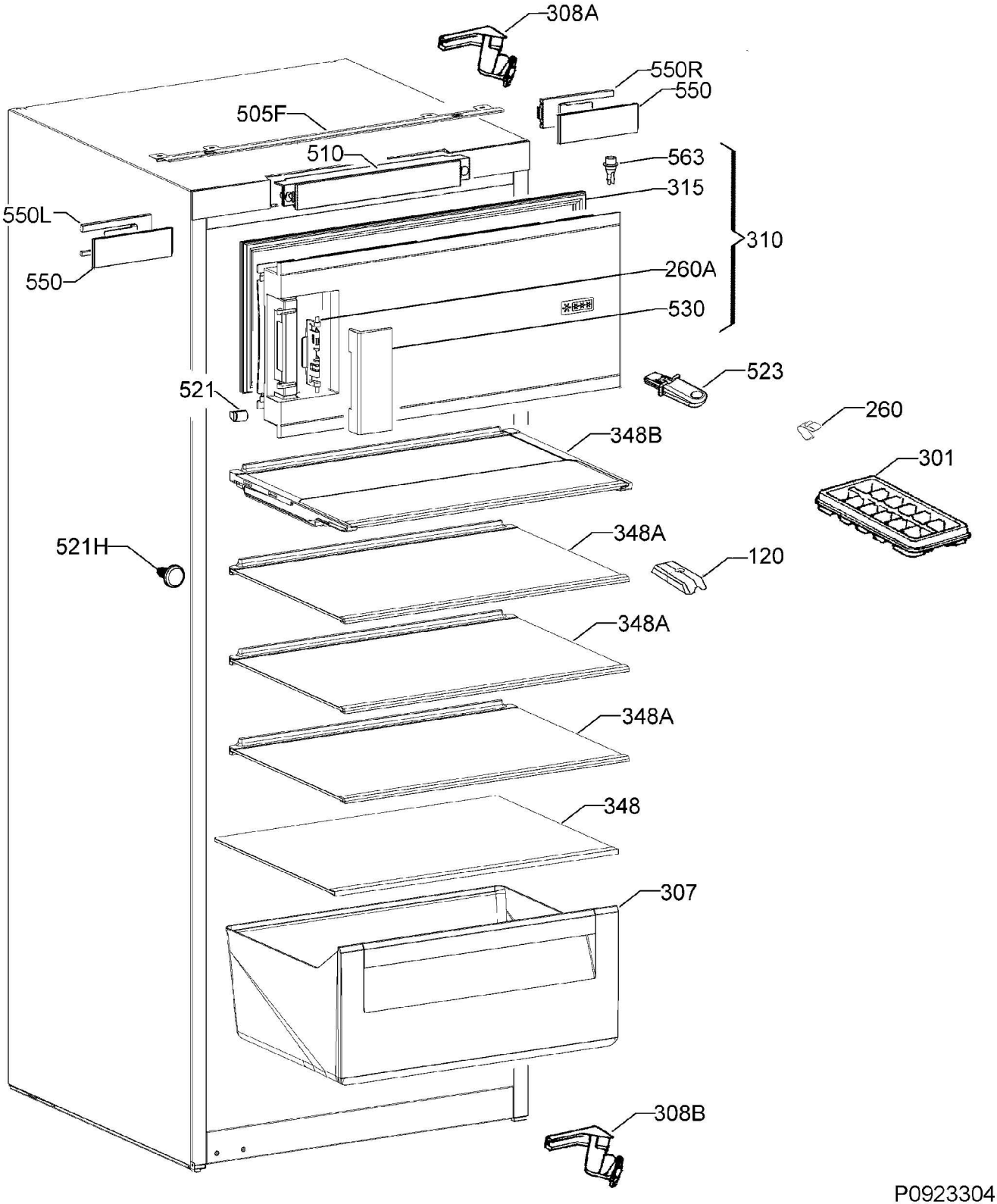

P09233041633