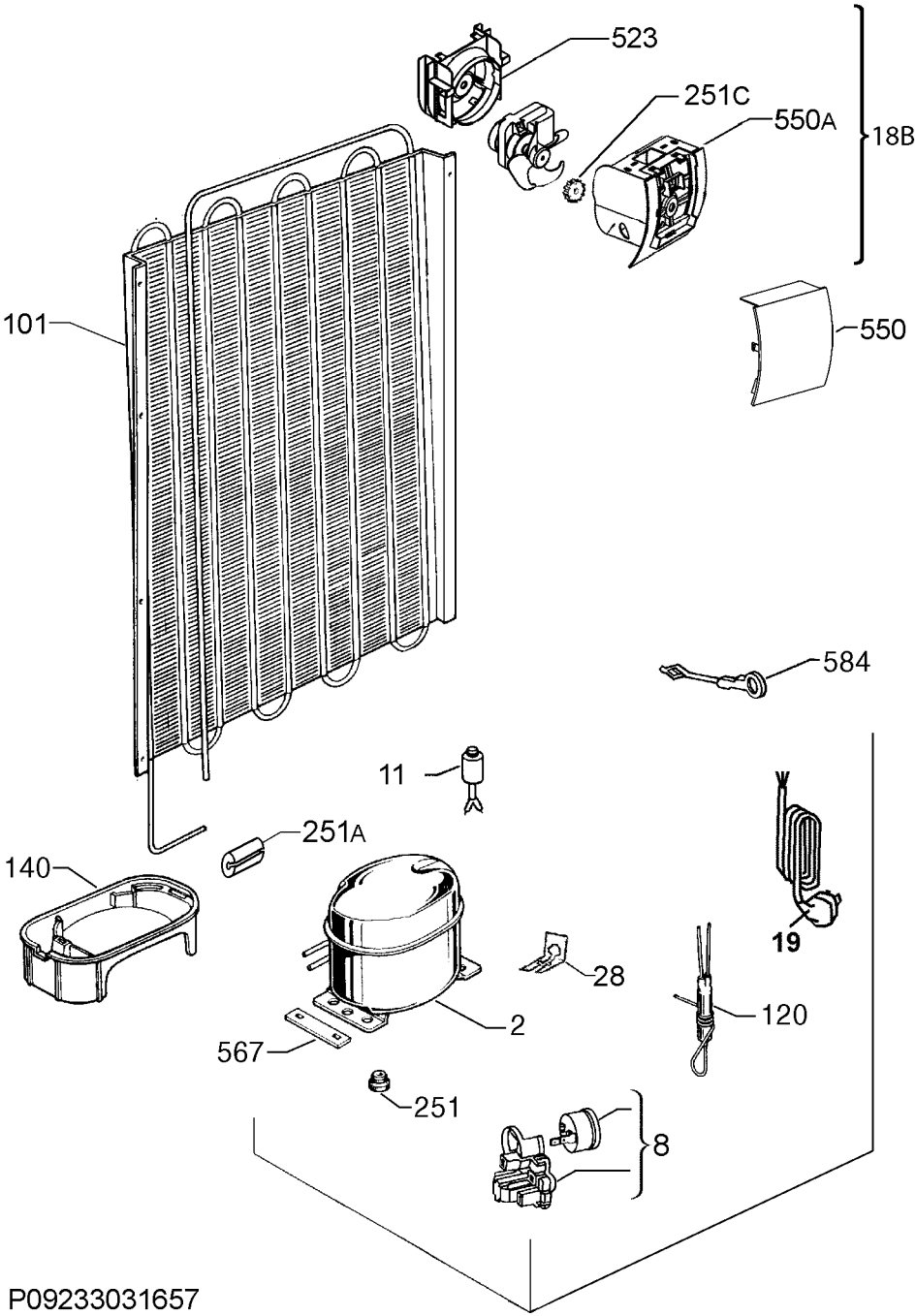

P09233031657