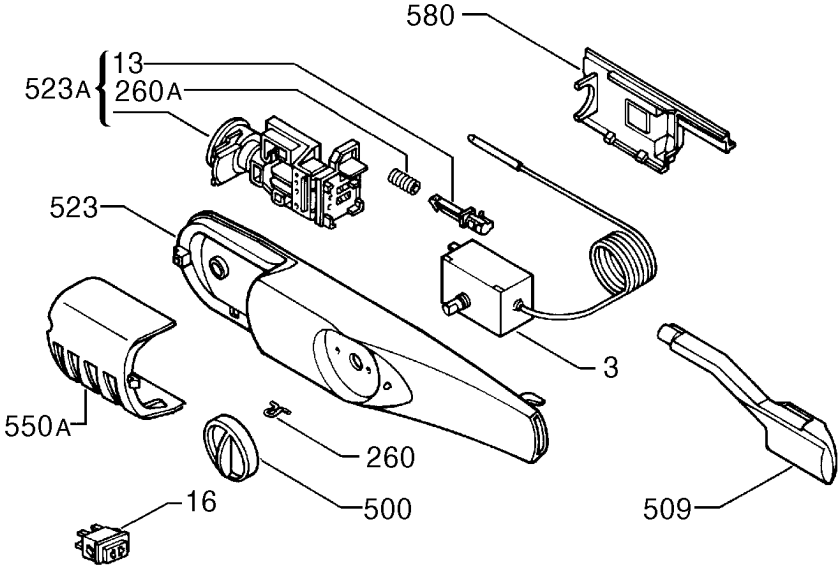

P09233025782