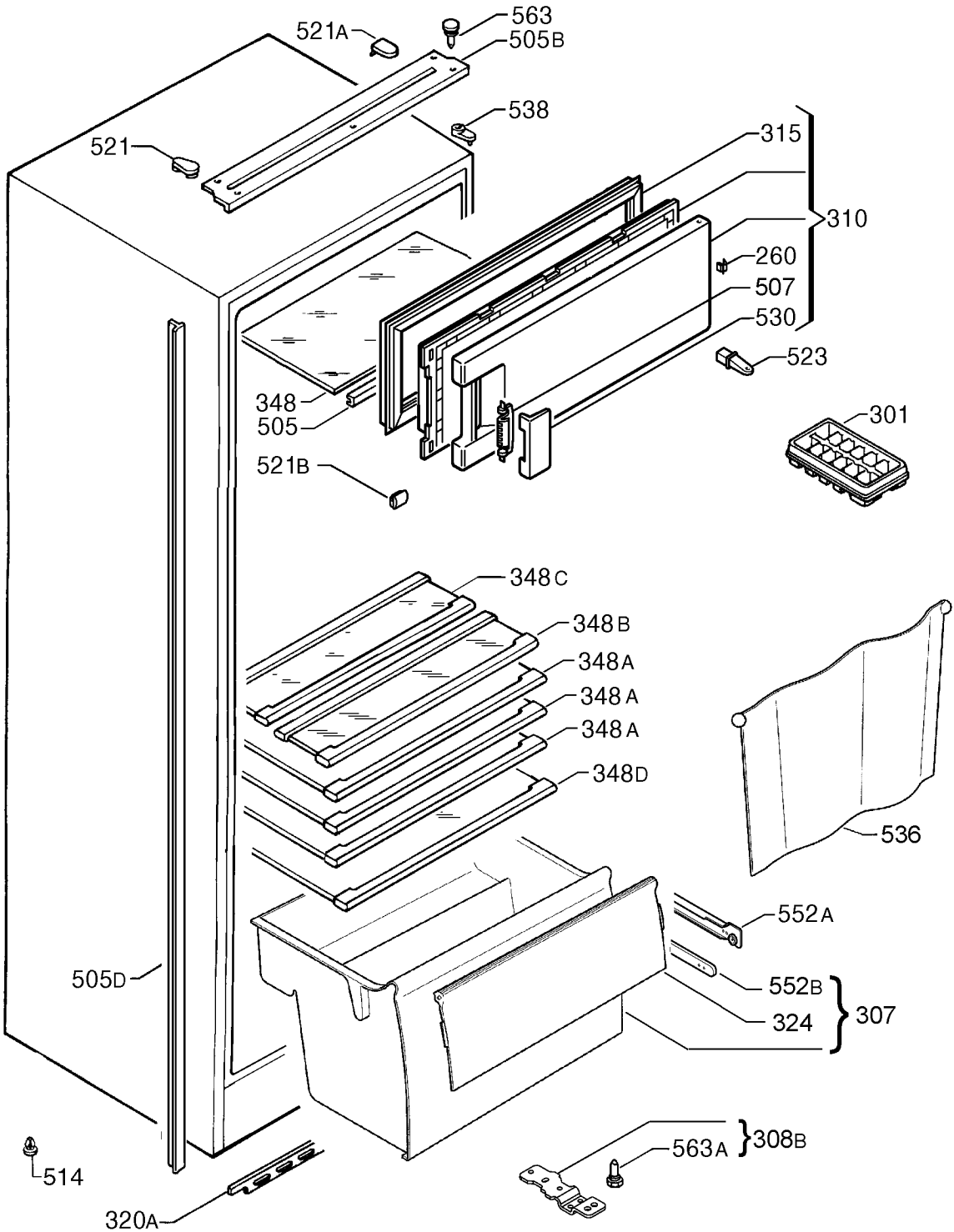

P09233020644