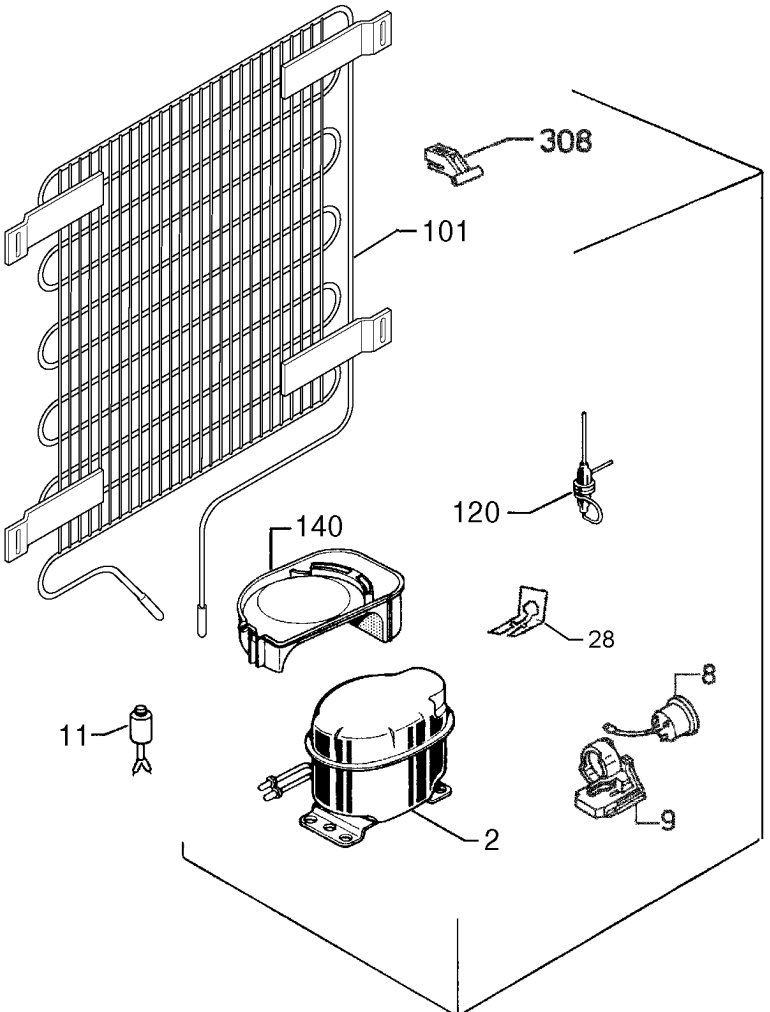

9233016340