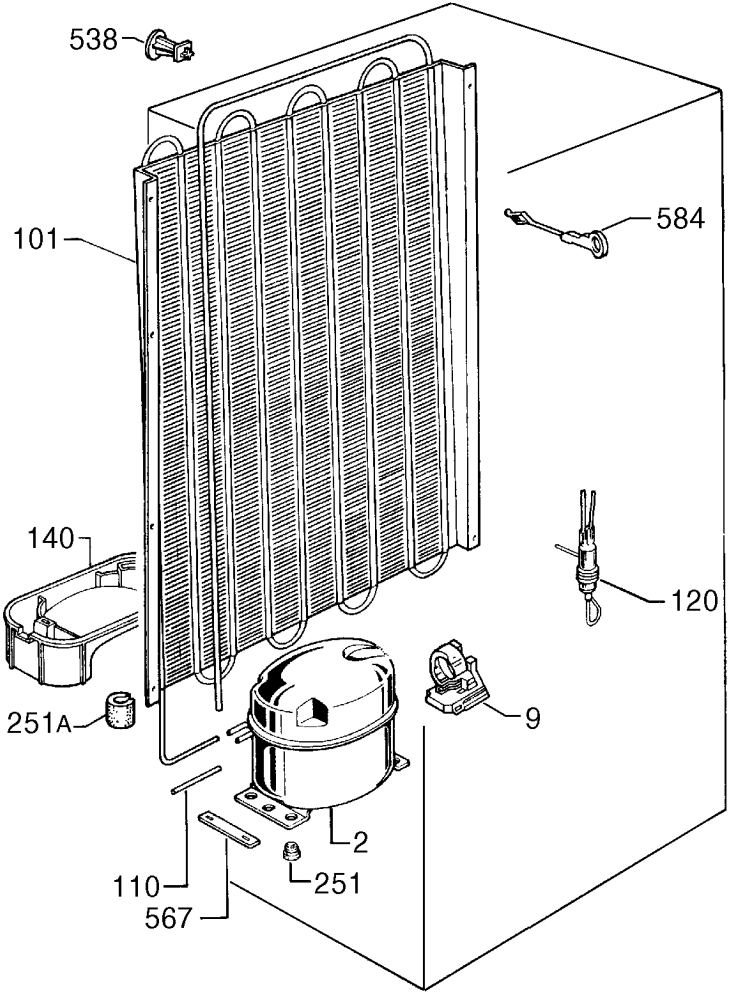

P09233012996