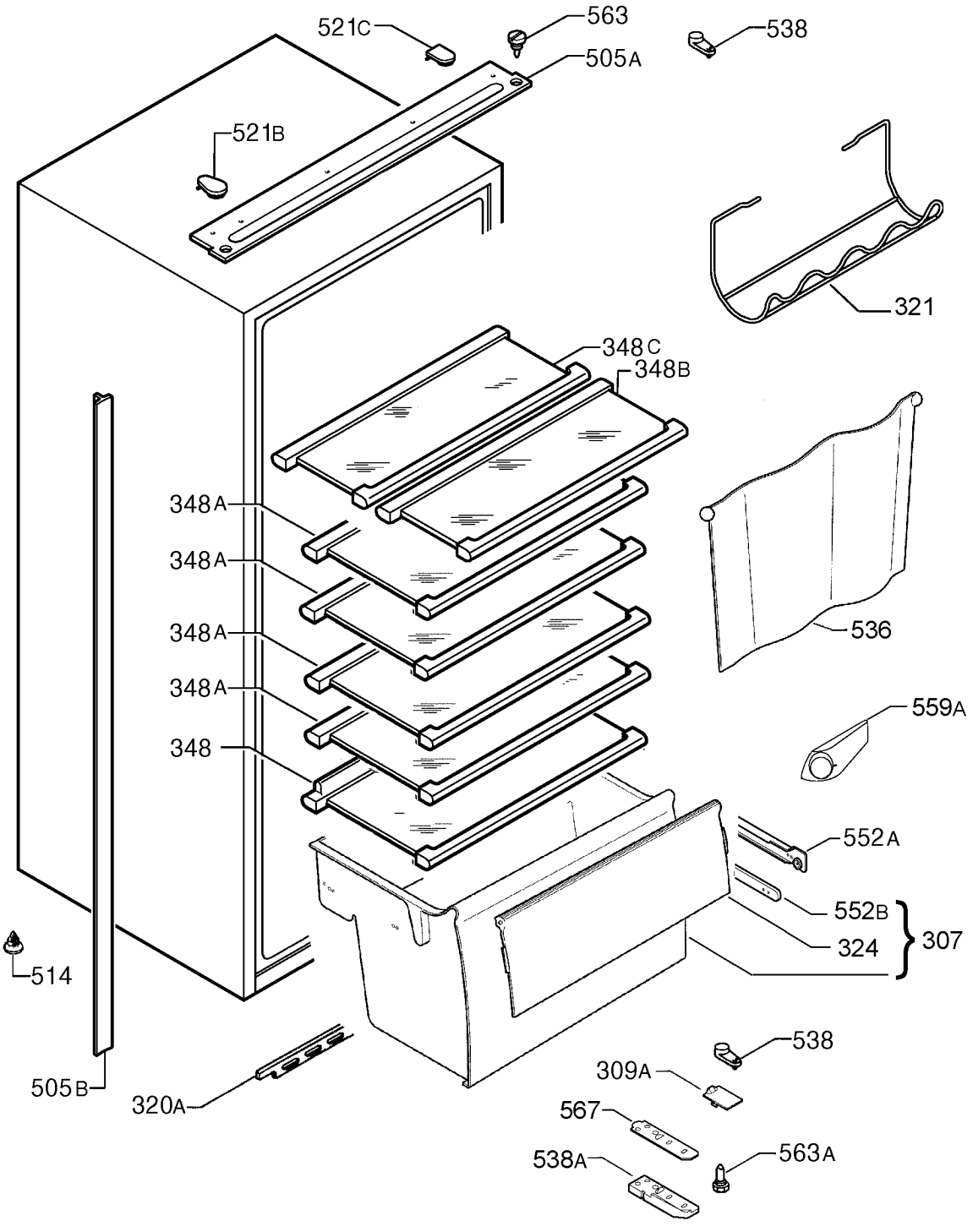

P09233011369