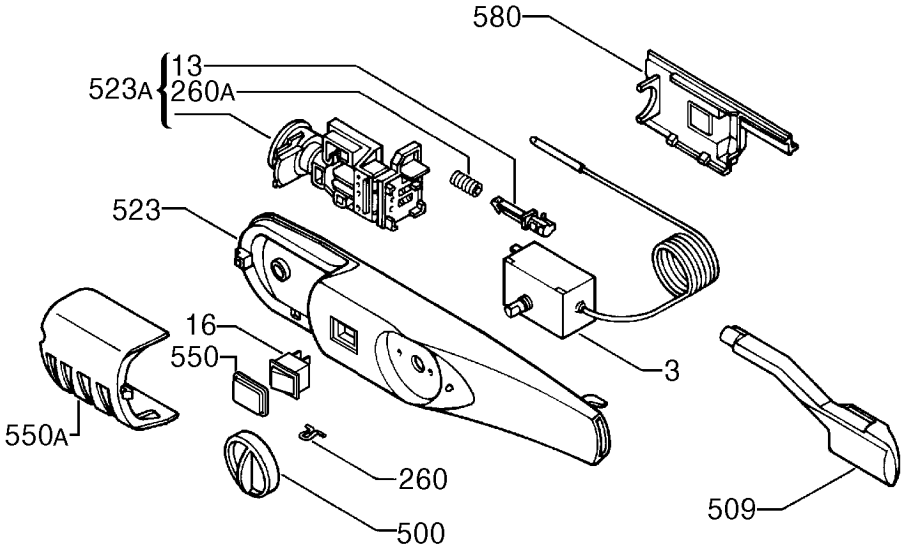

9233005935