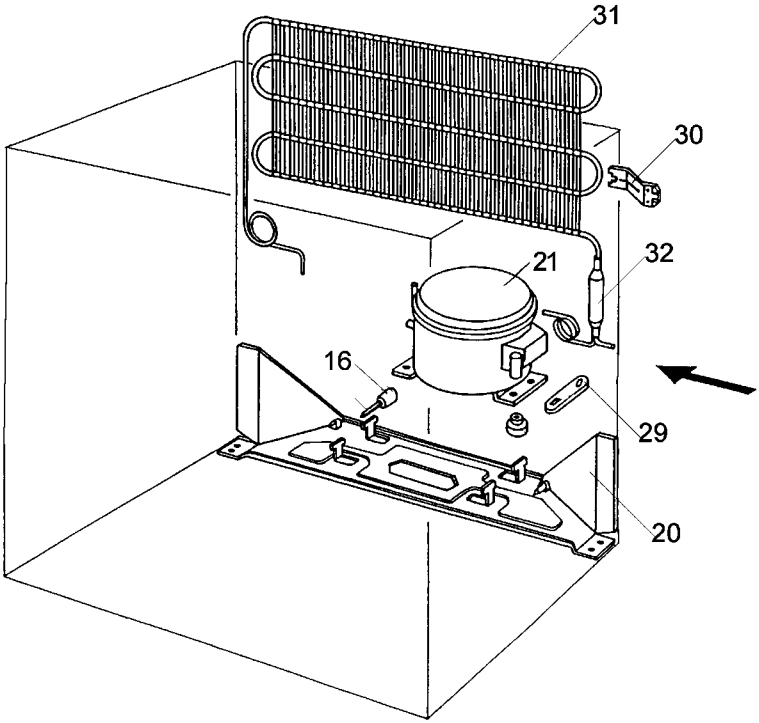
31
30
32
21
16
29
20

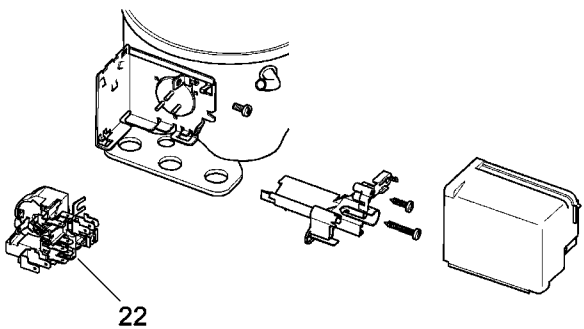
22
9233004005
RB7RKOOK