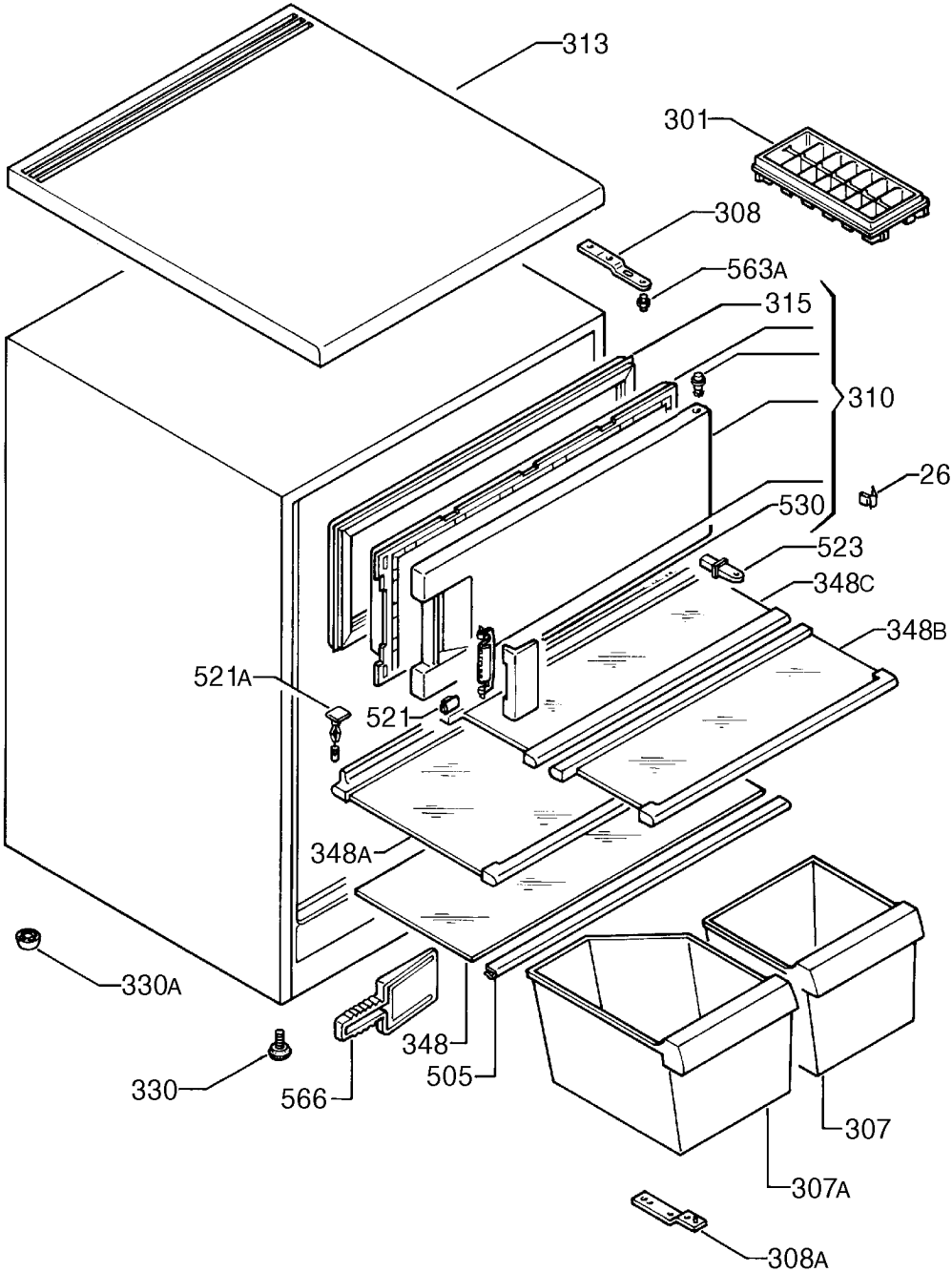

P09233002430