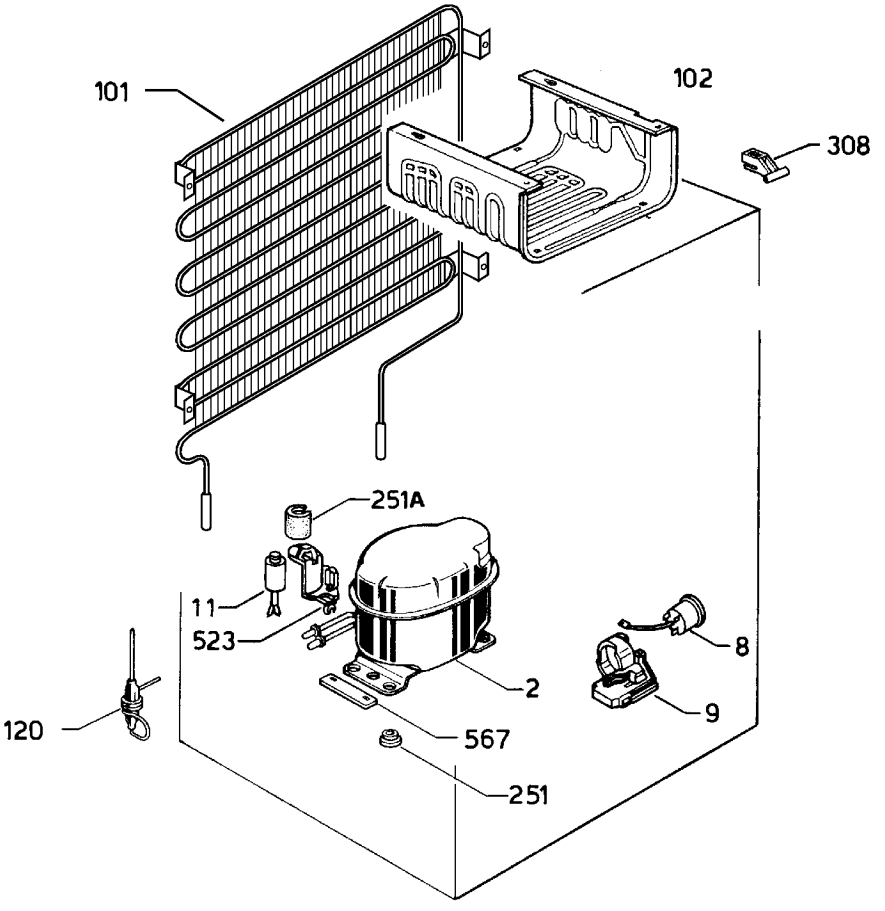

P09233002380