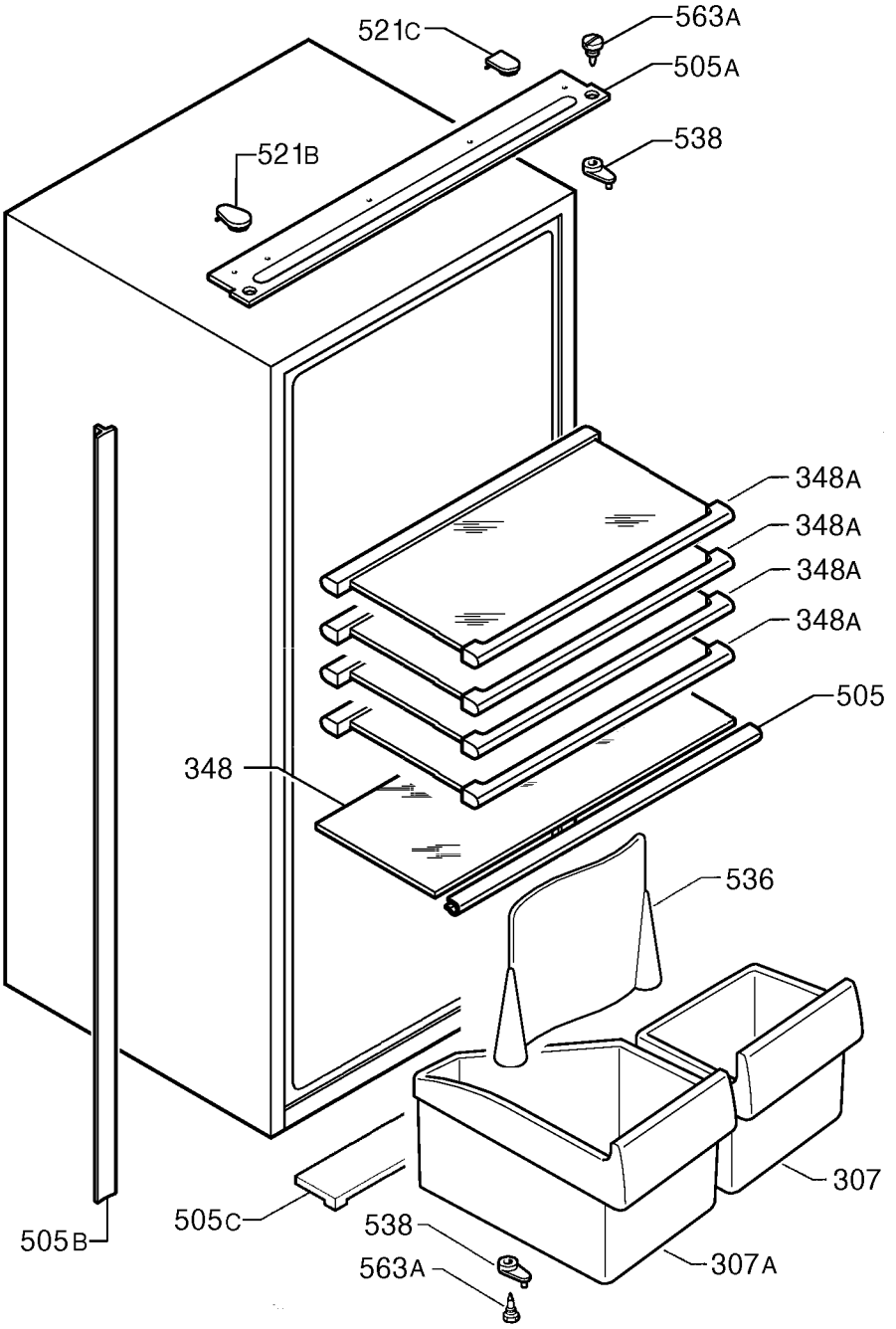

P09233002014