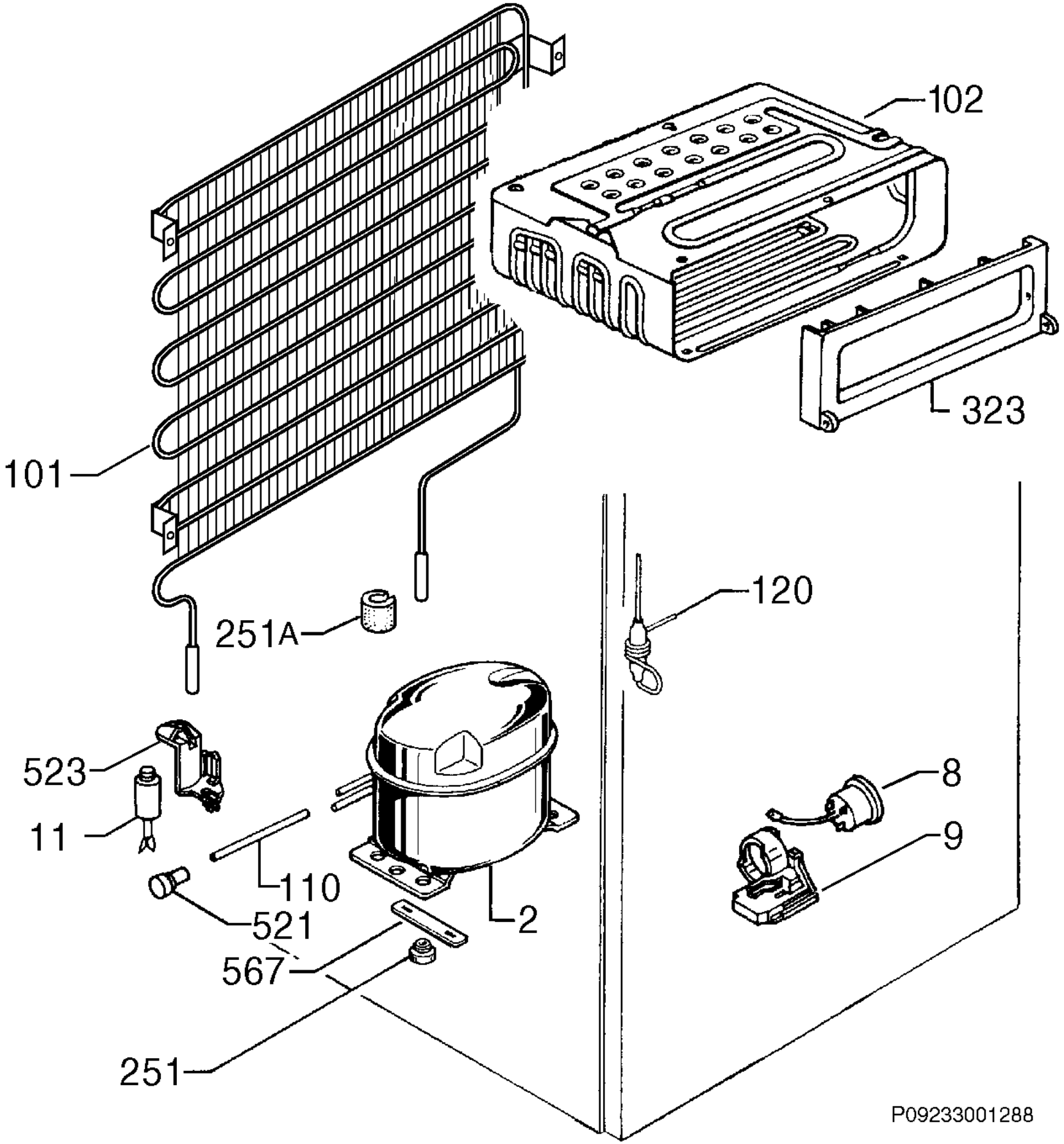
102
323
101
120
251A
523
11
110
521
567
251
2
8
9
P09233001288