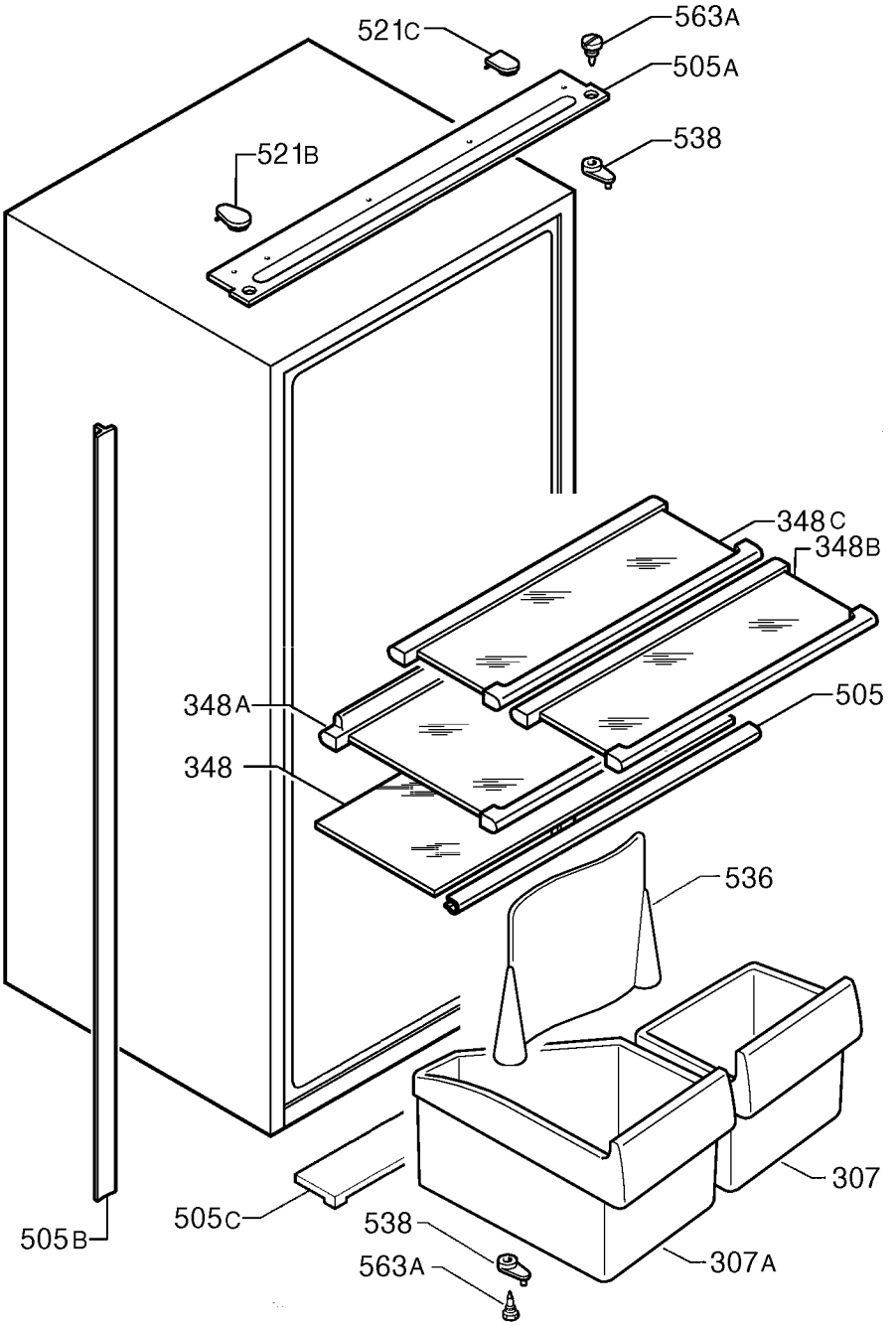

P09233000775