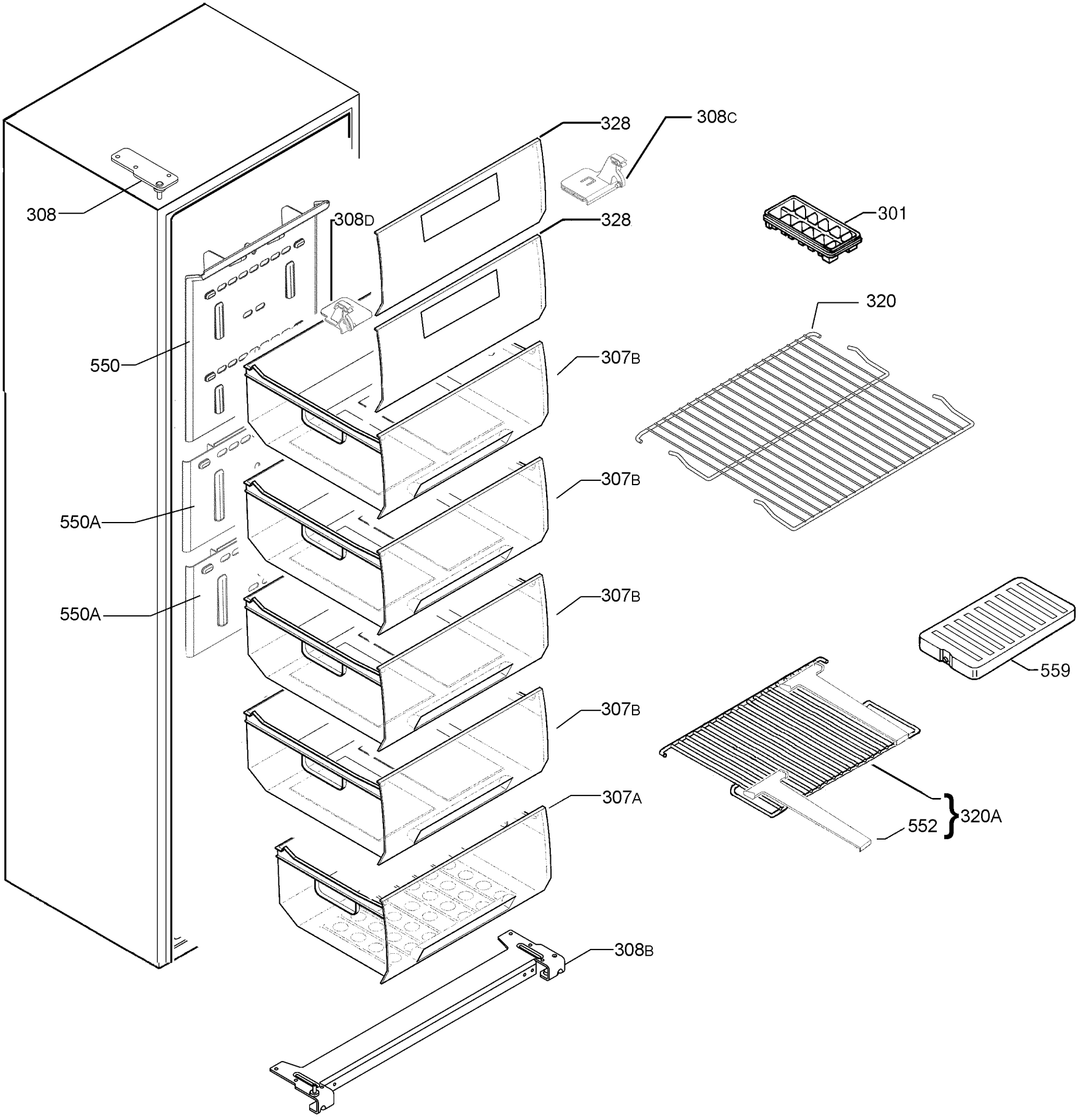

P09223009792