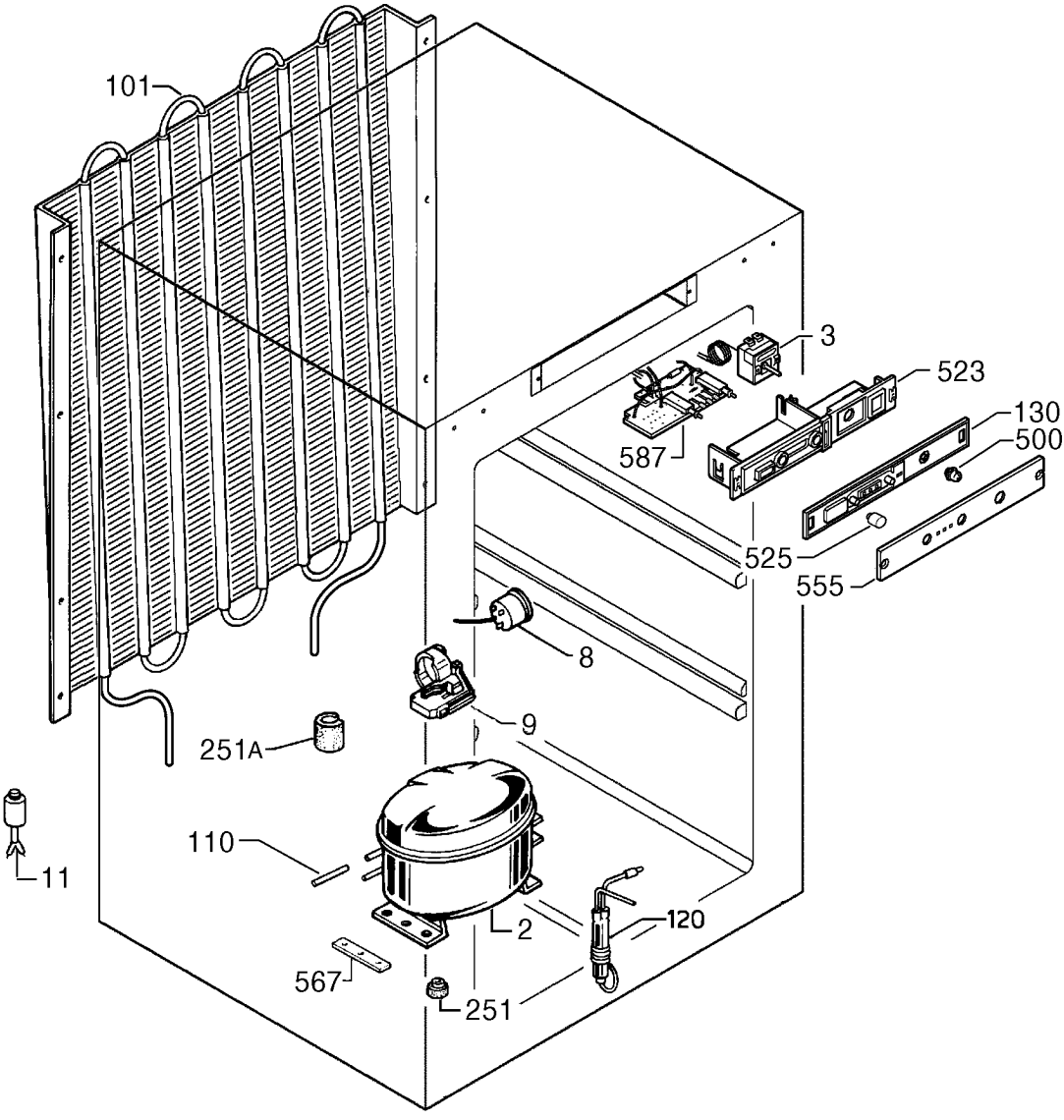

P09223008482