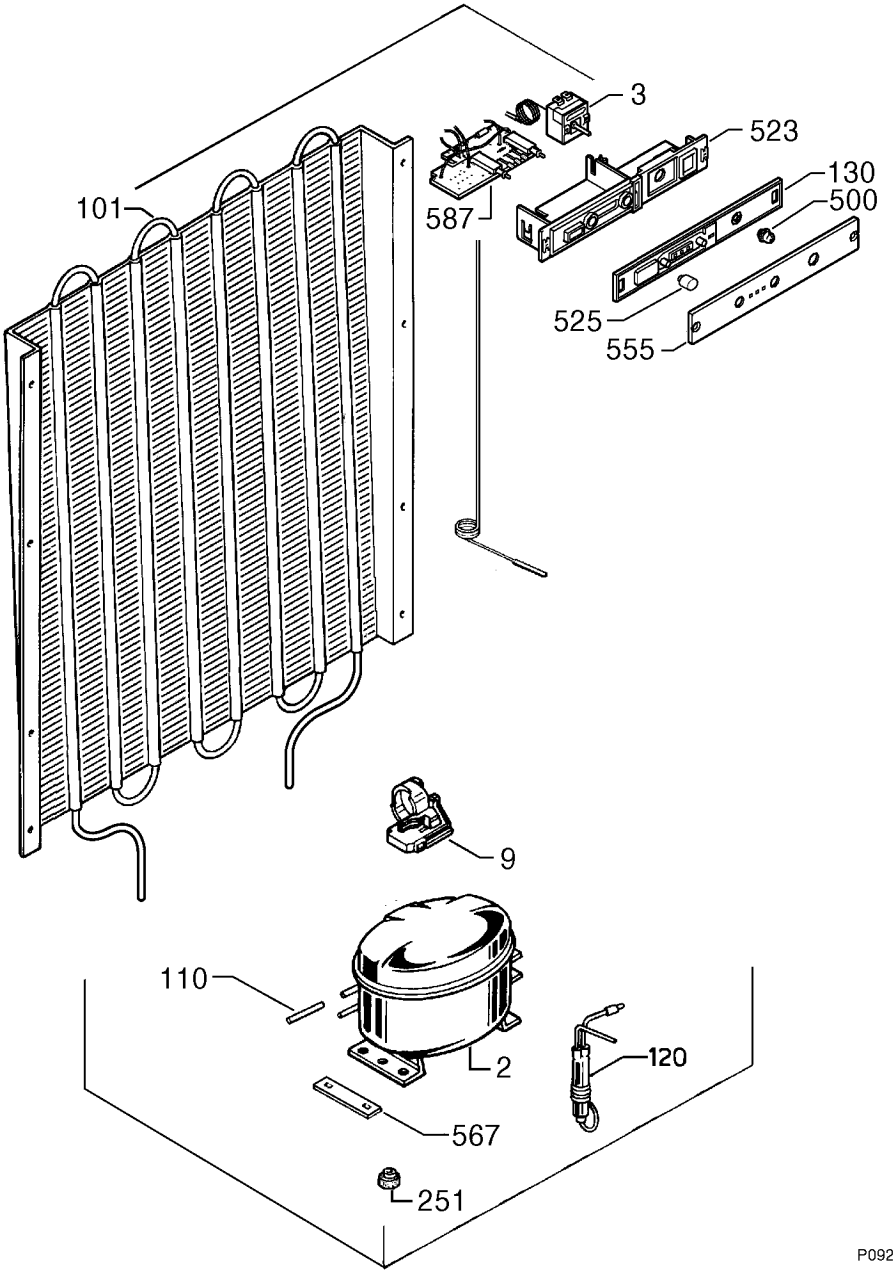

P09223001463