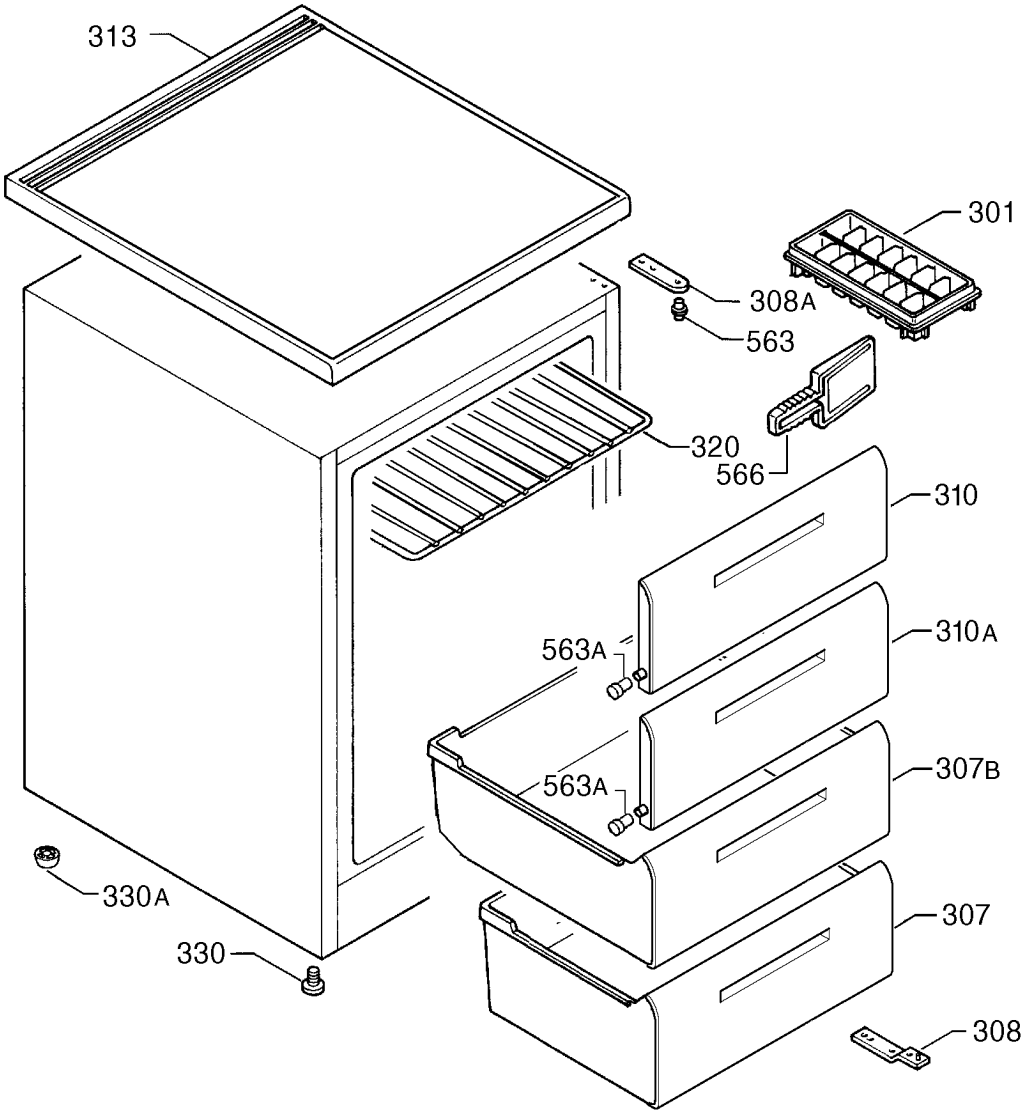

P09223000574