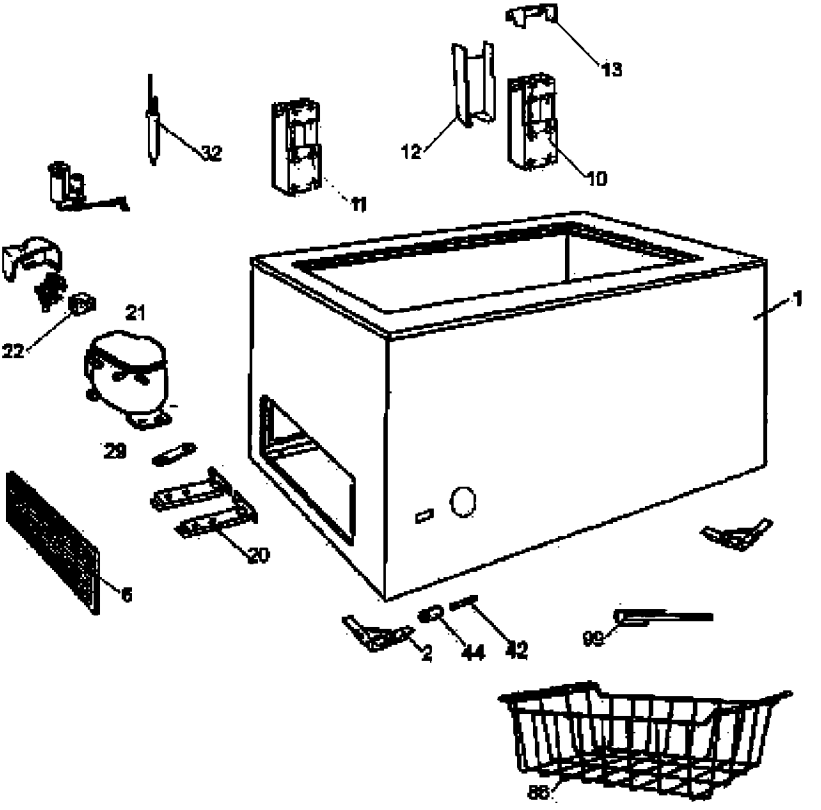

9203002241