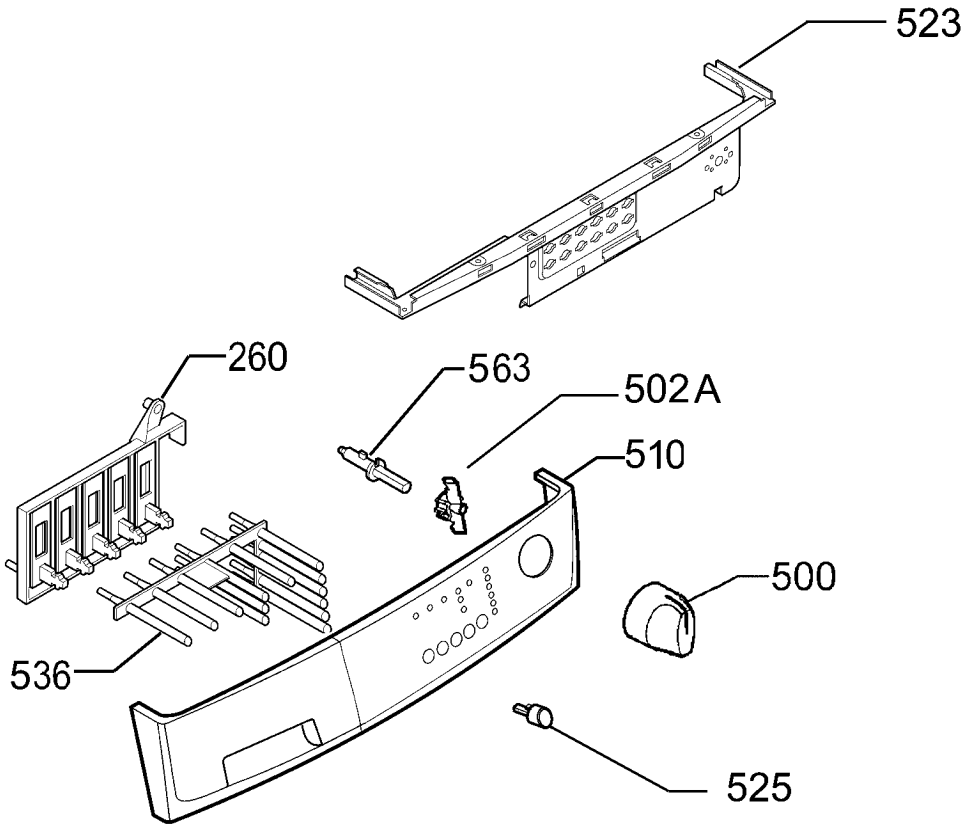


9163018457