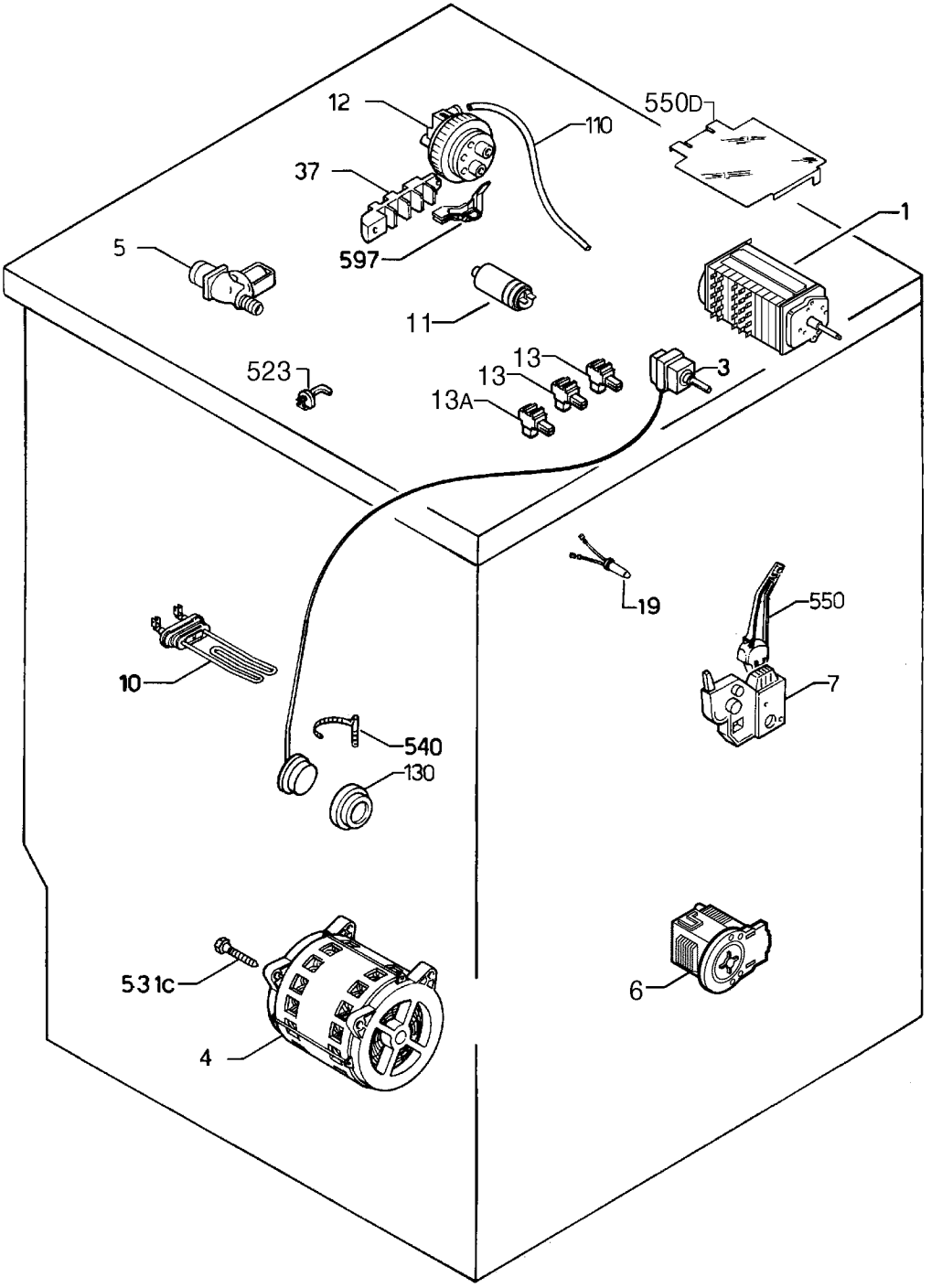

9143018716