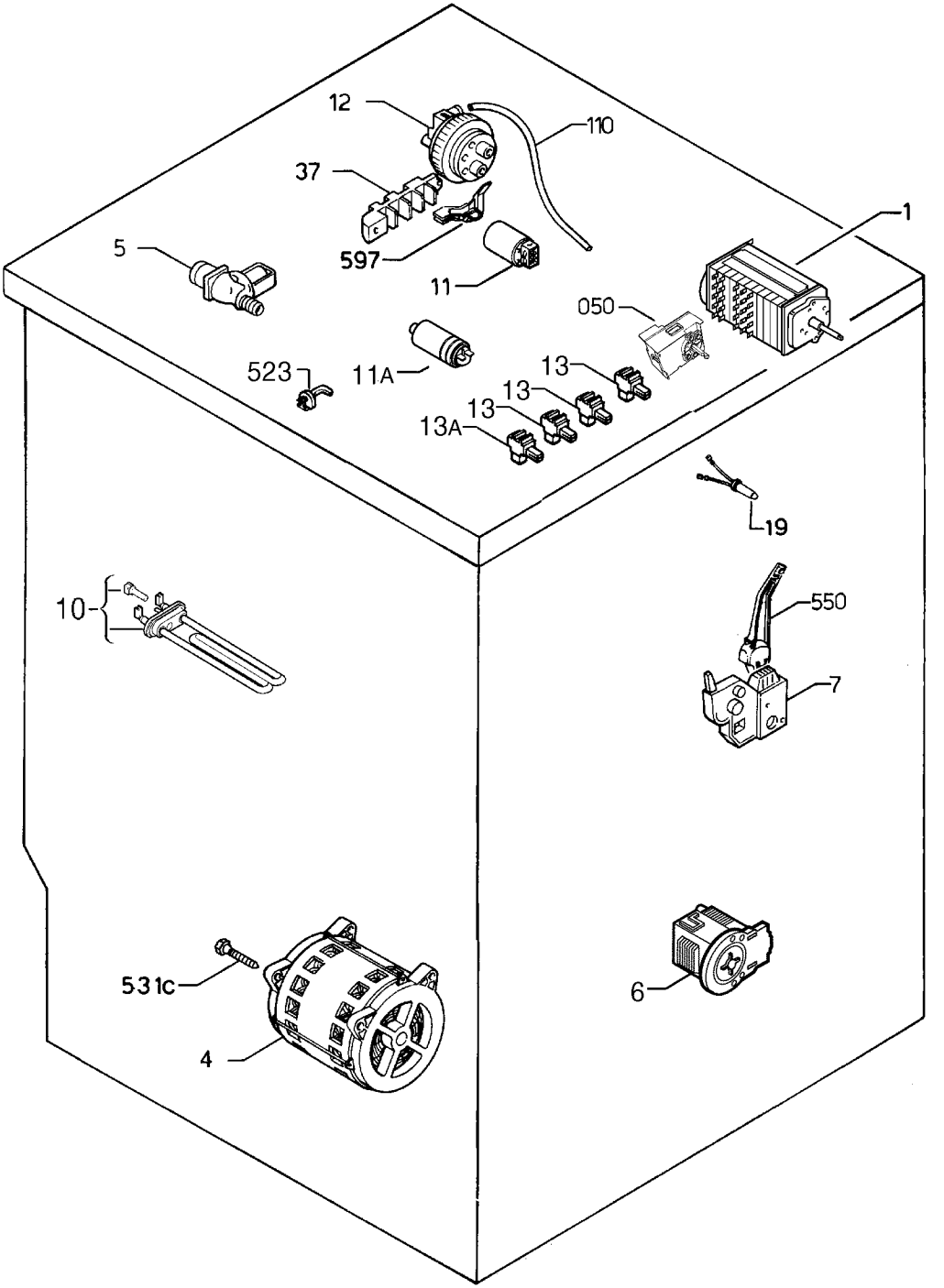

9143017091