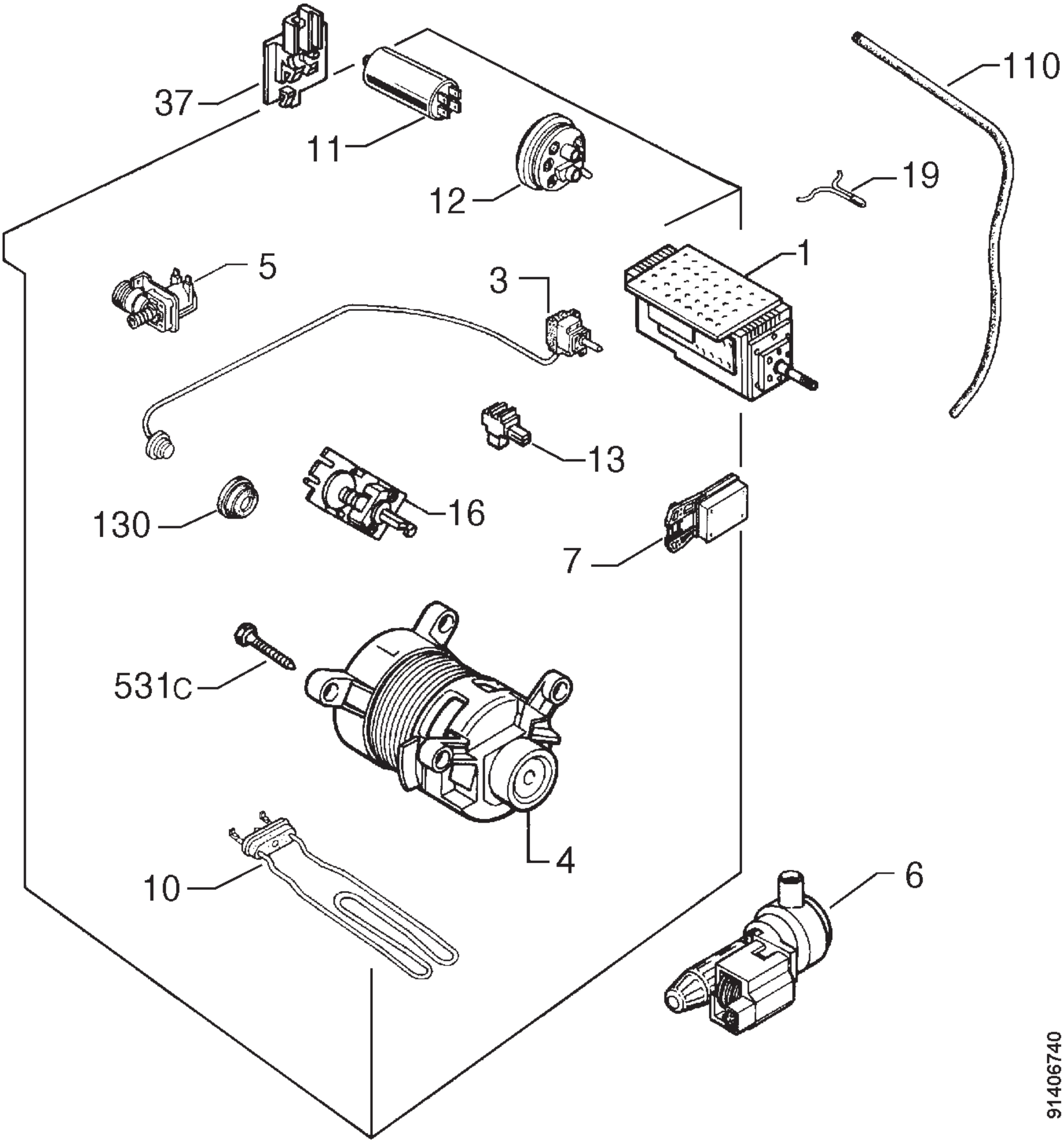
37
11
12
110
19
1
5
3
13
130
16
7
531c
4
10
6
91406740