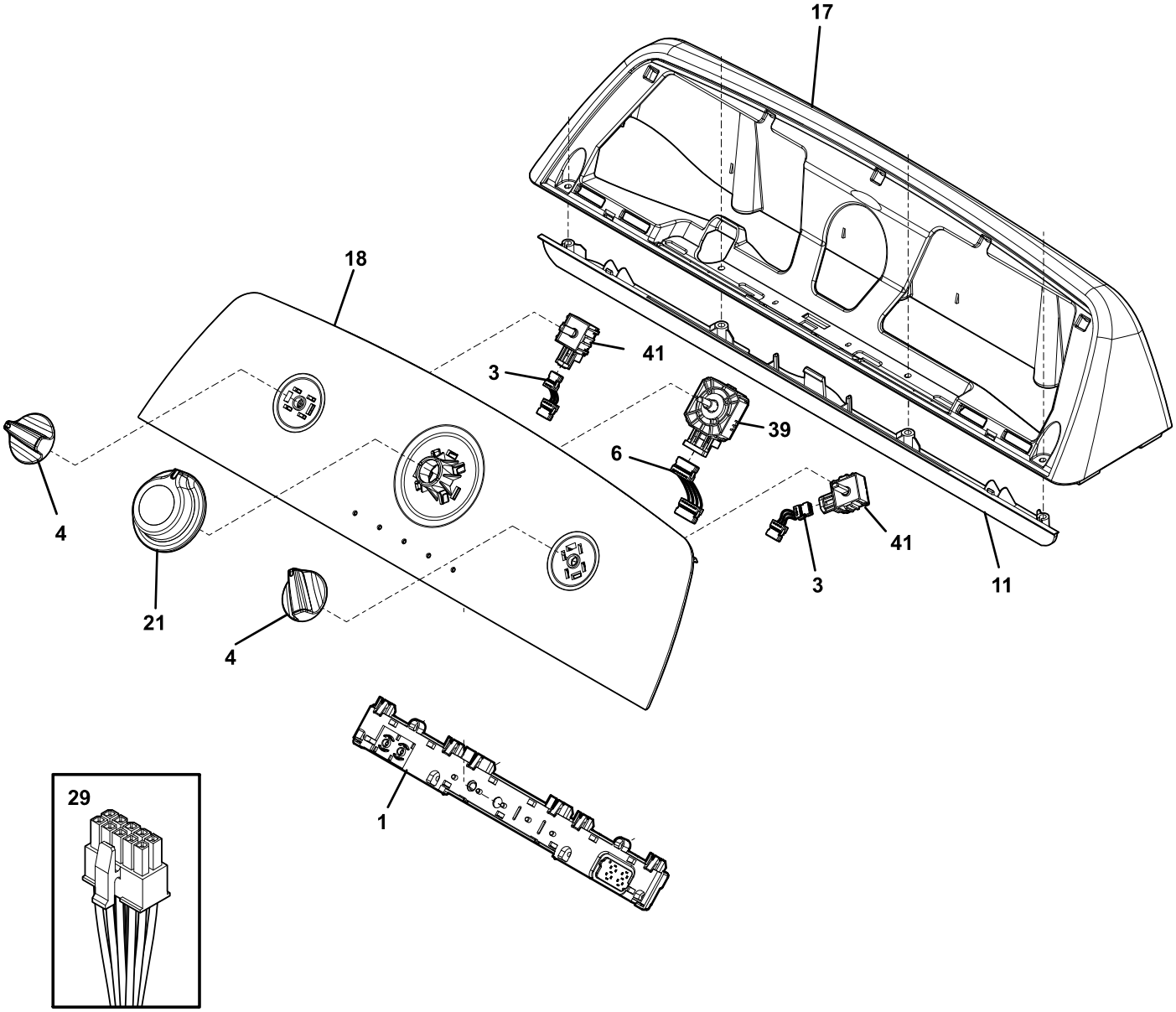

P09133021912