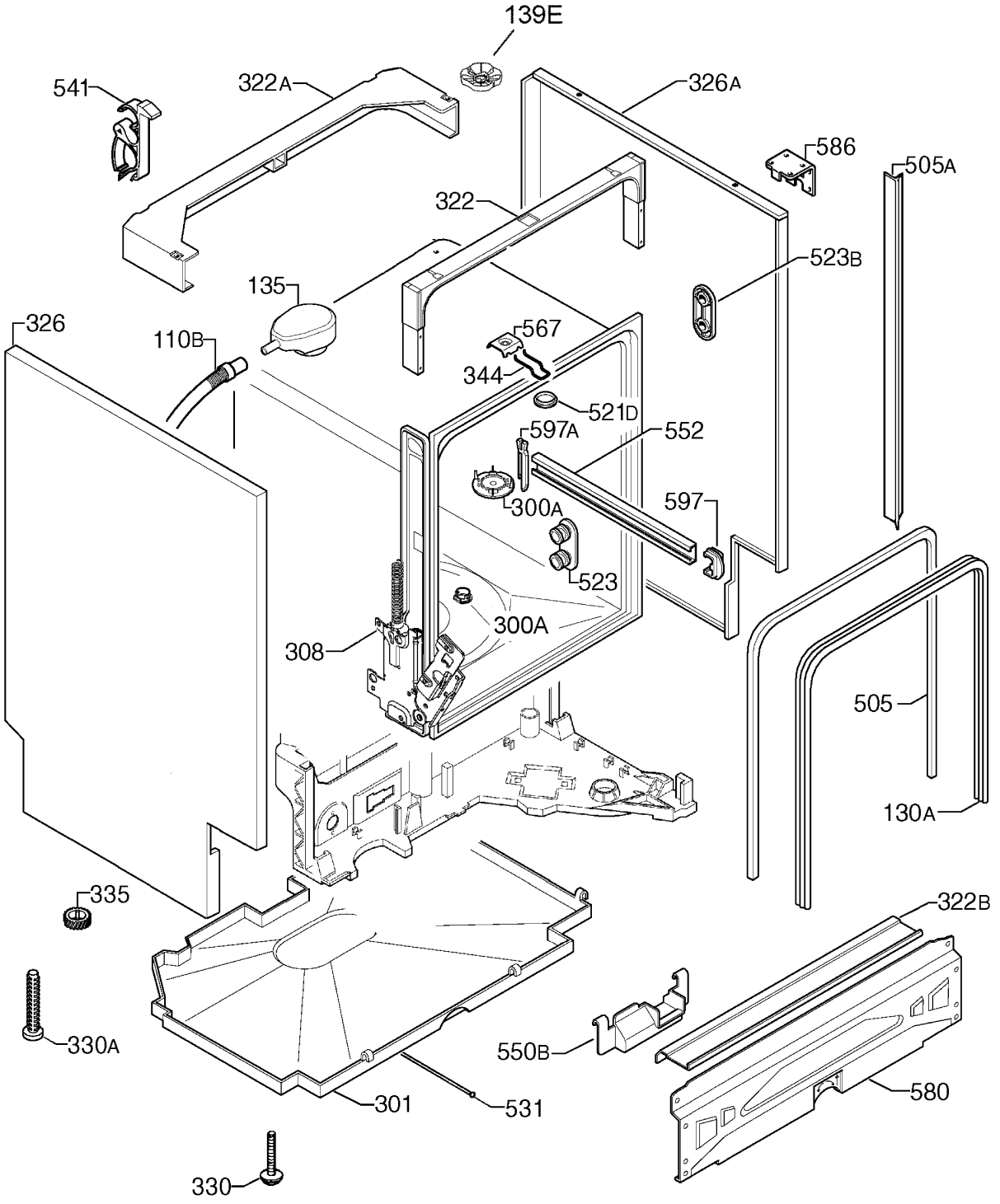

P09113011853