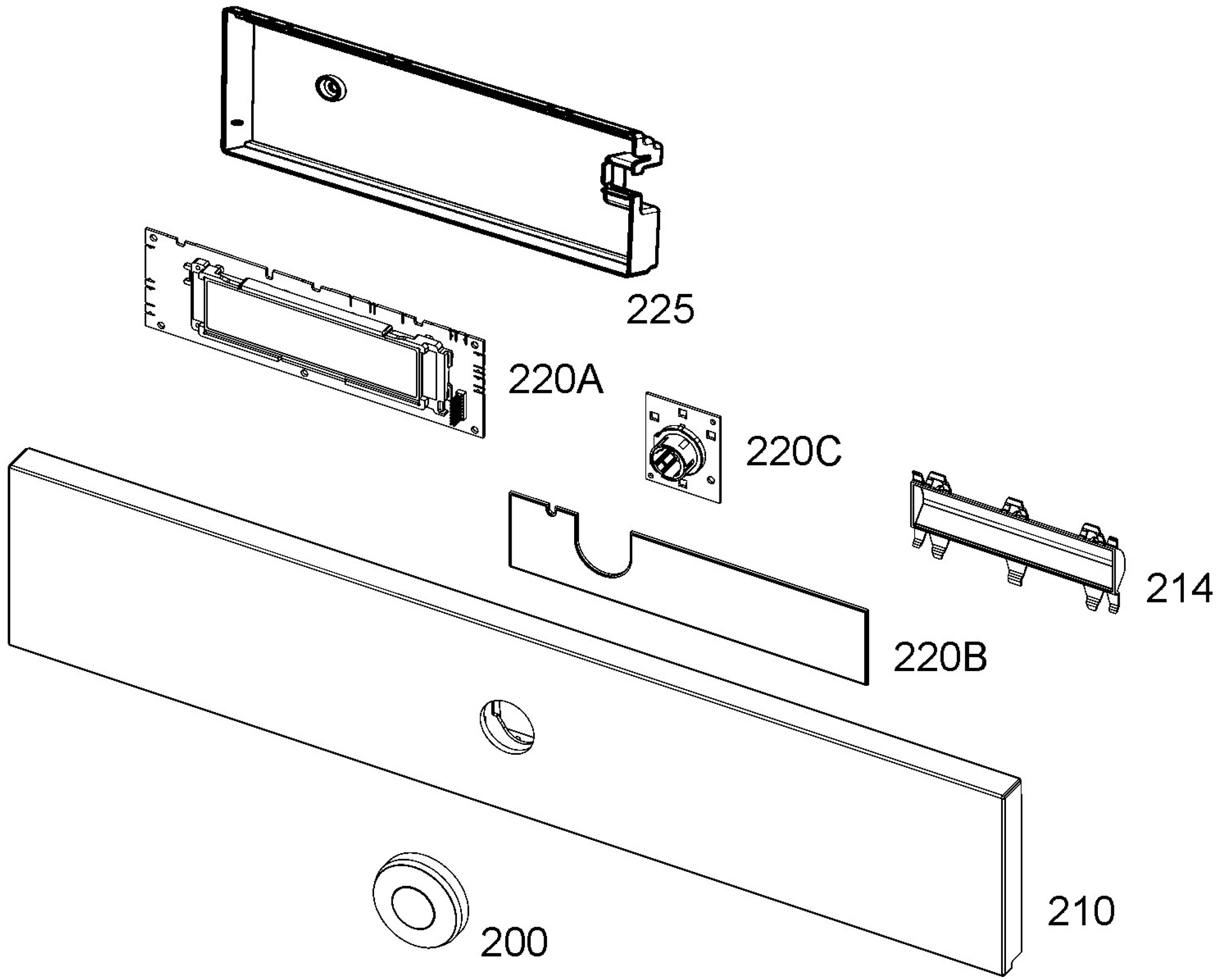

P00003108536