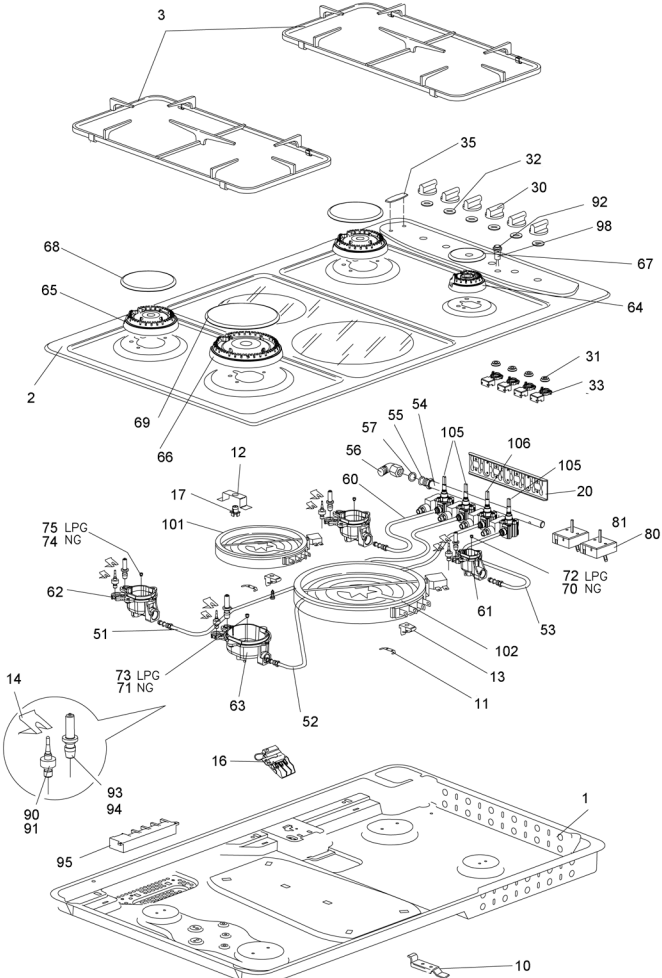

P00003047313