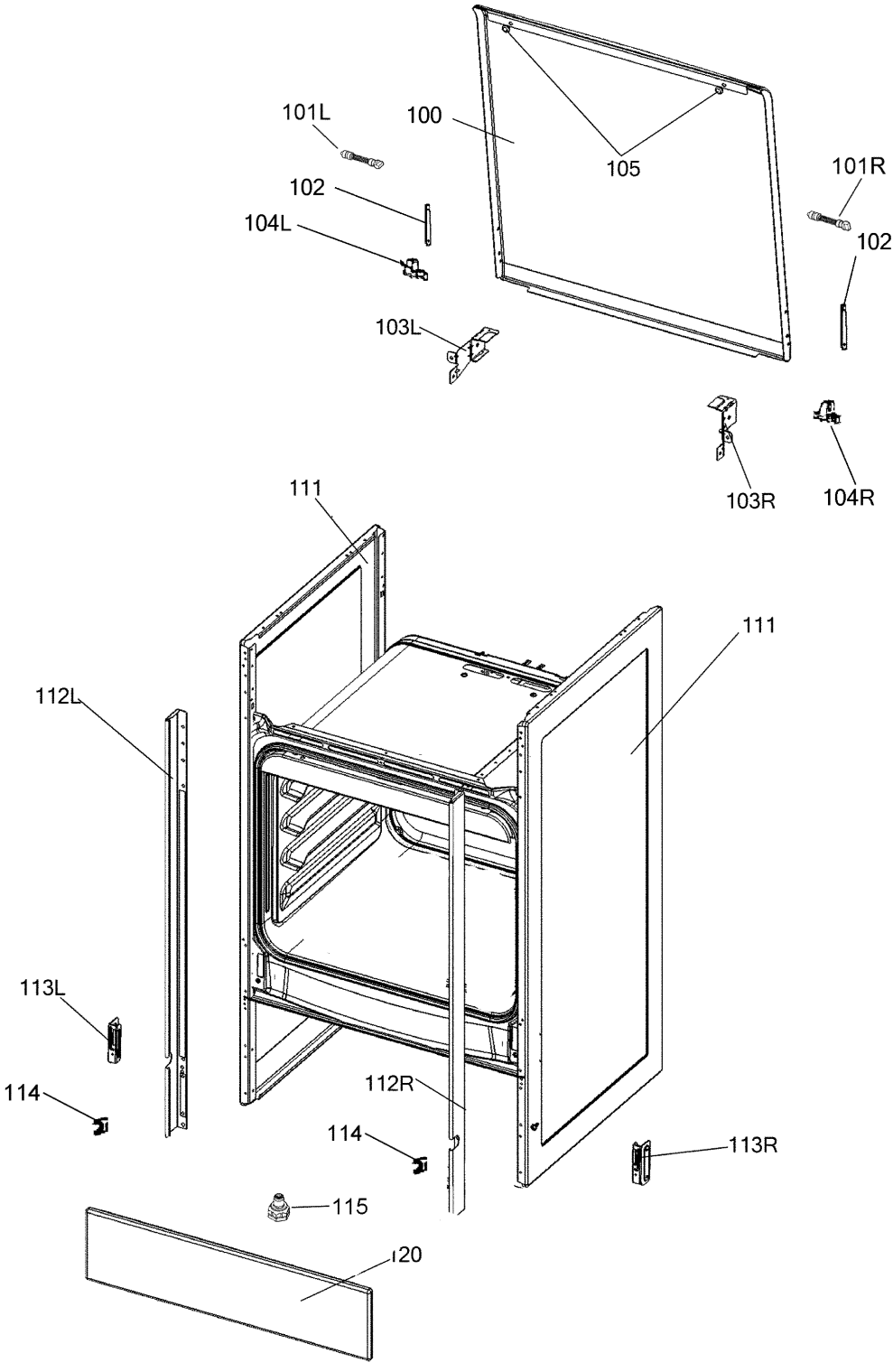

P00003045196