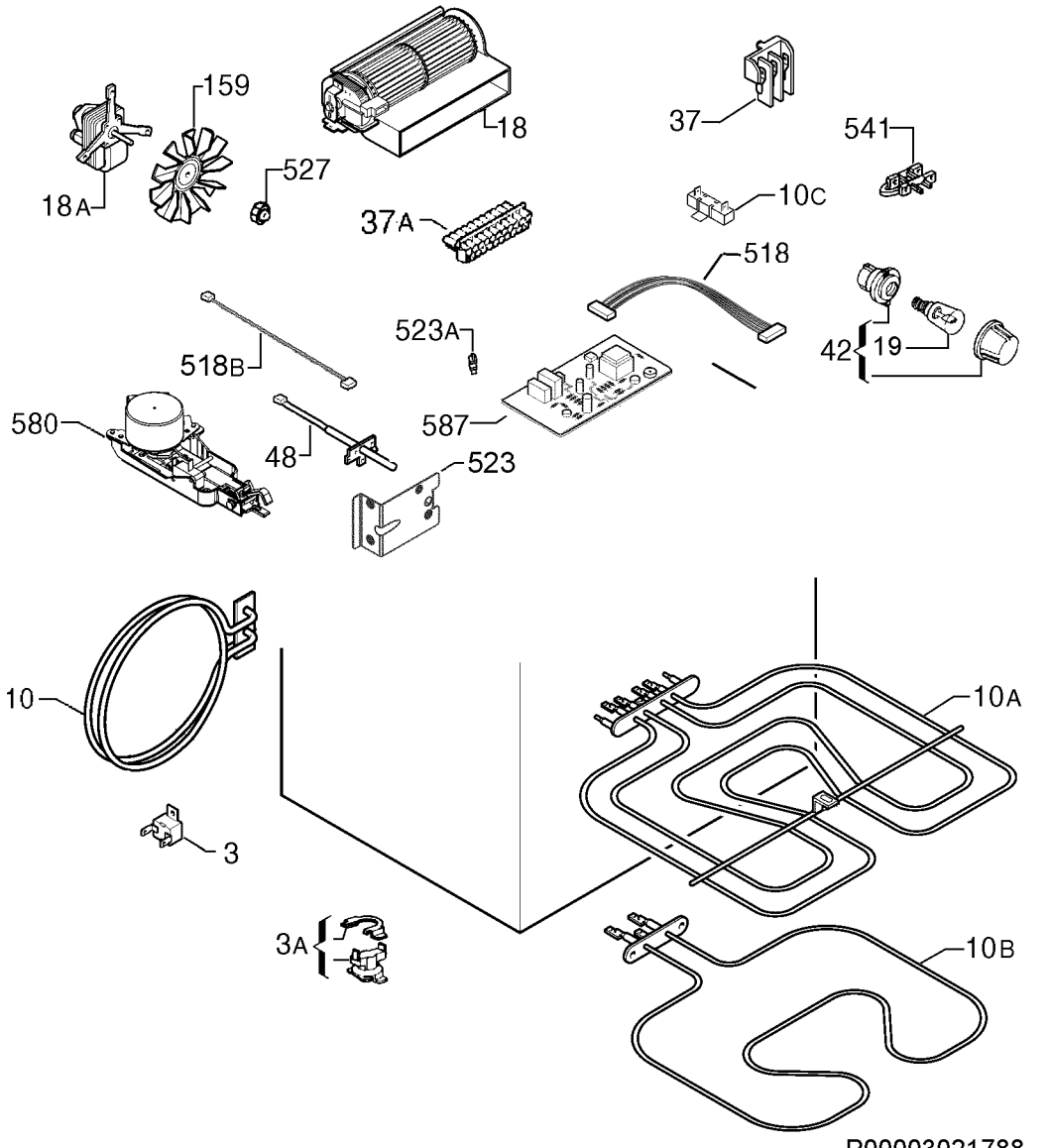

P00003021788