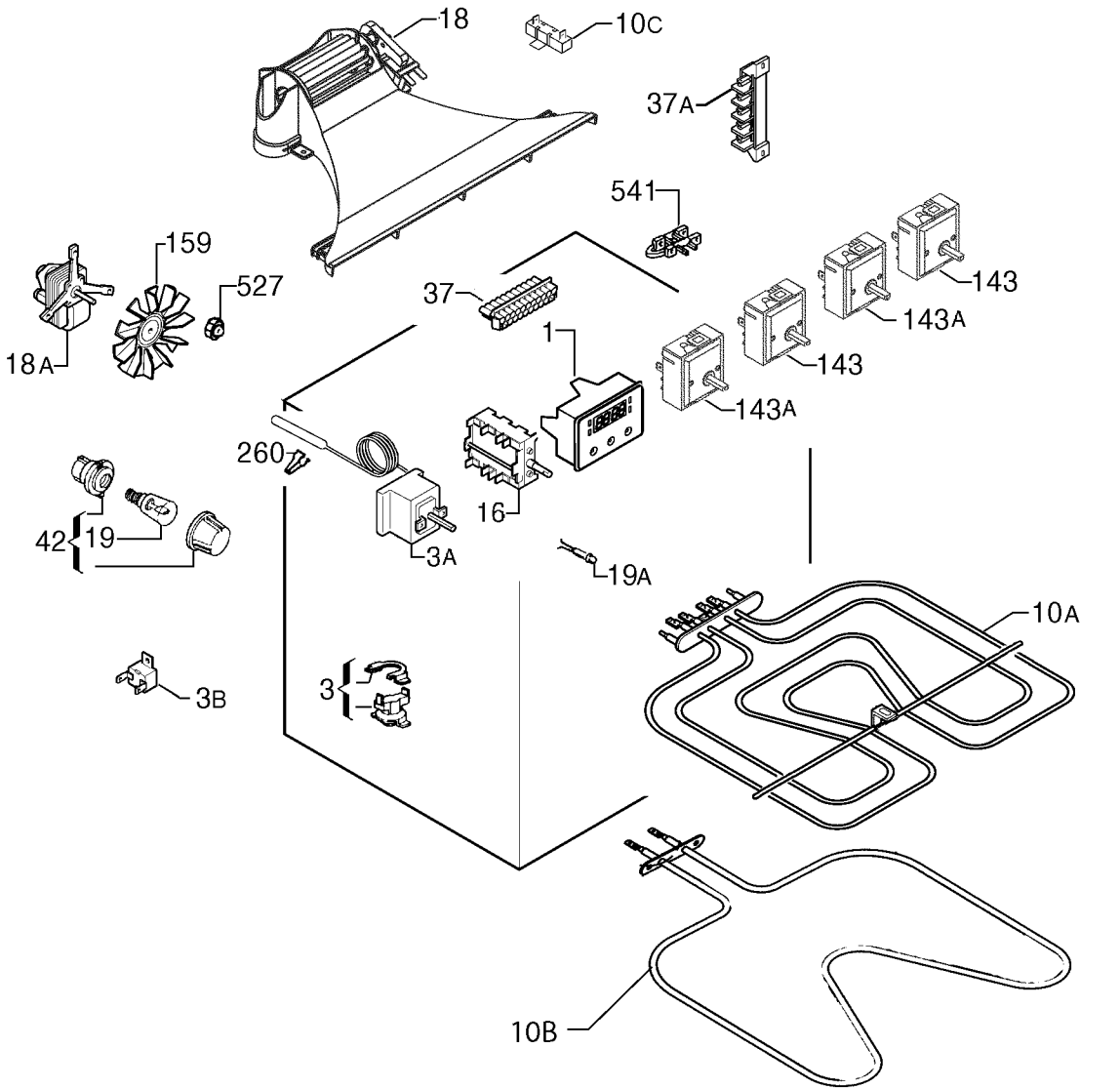

P00003021681