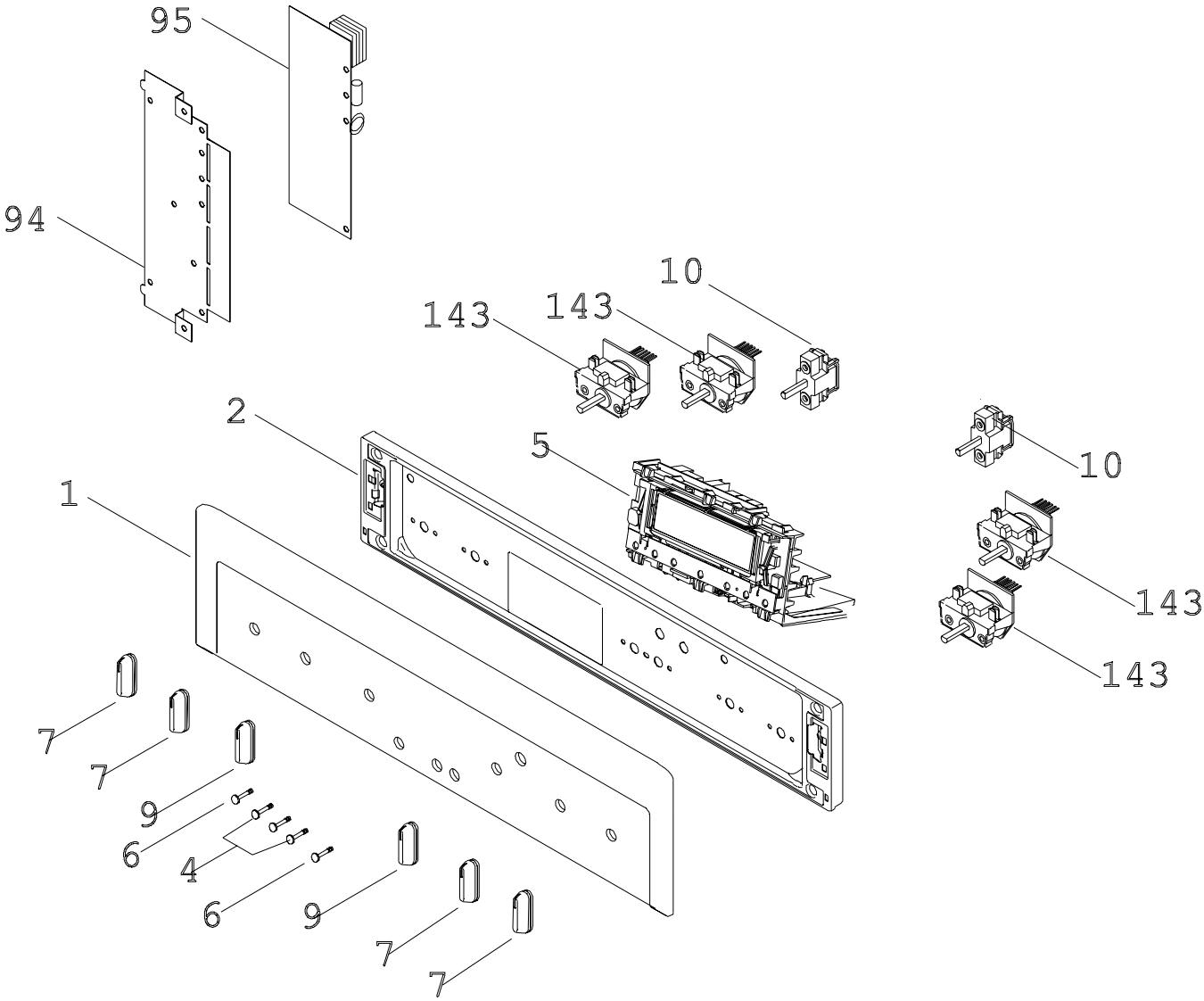
95
94
10
143
143
2
5
1
10
143
143
7
7
9
6
4
6
9
7
7

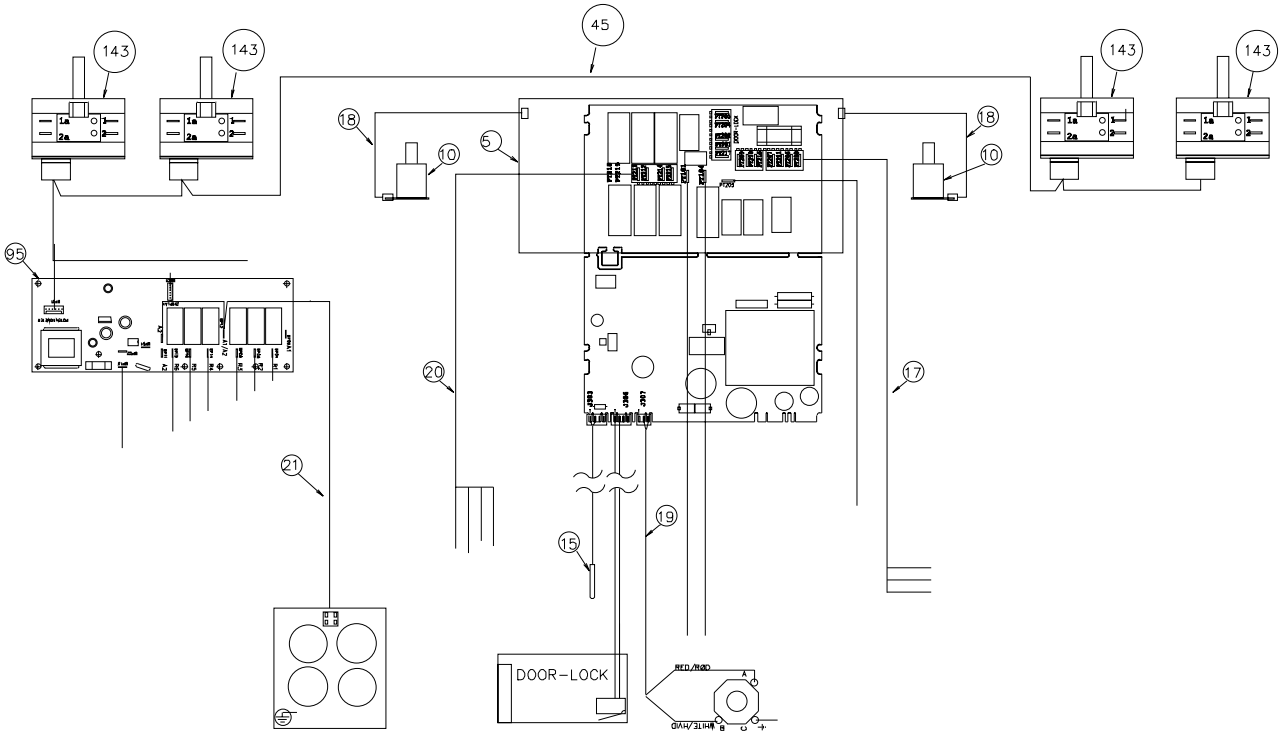
45
143
143
143
143
18
10
5
18
10
95
20
17
21
19
15
DOOR-LOCK
RED/RED
WHITE/WHD