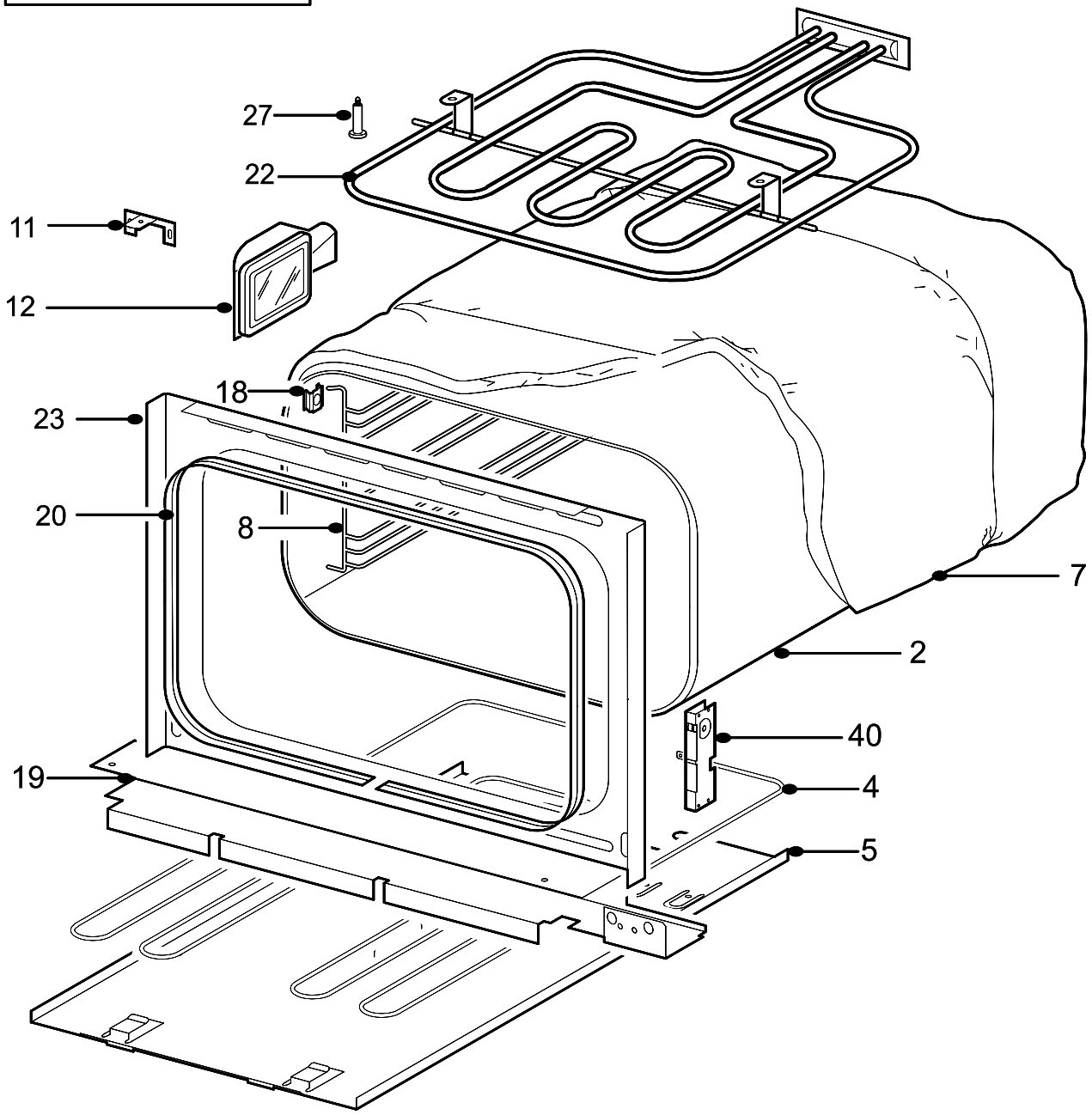GRILL CAVITY ASSY
NH102045626D