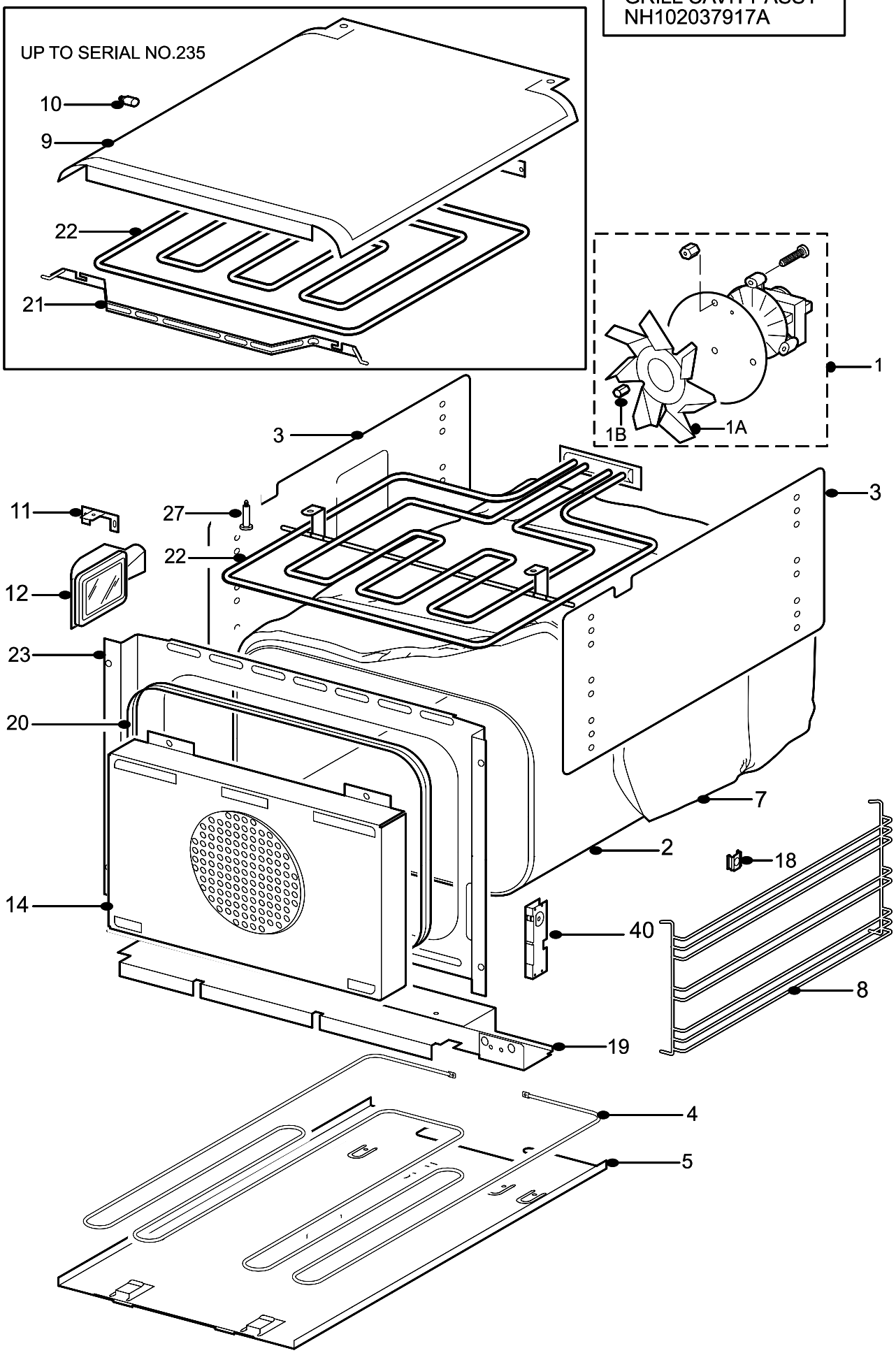GRILL CAVITY ASSY
NH102037917A