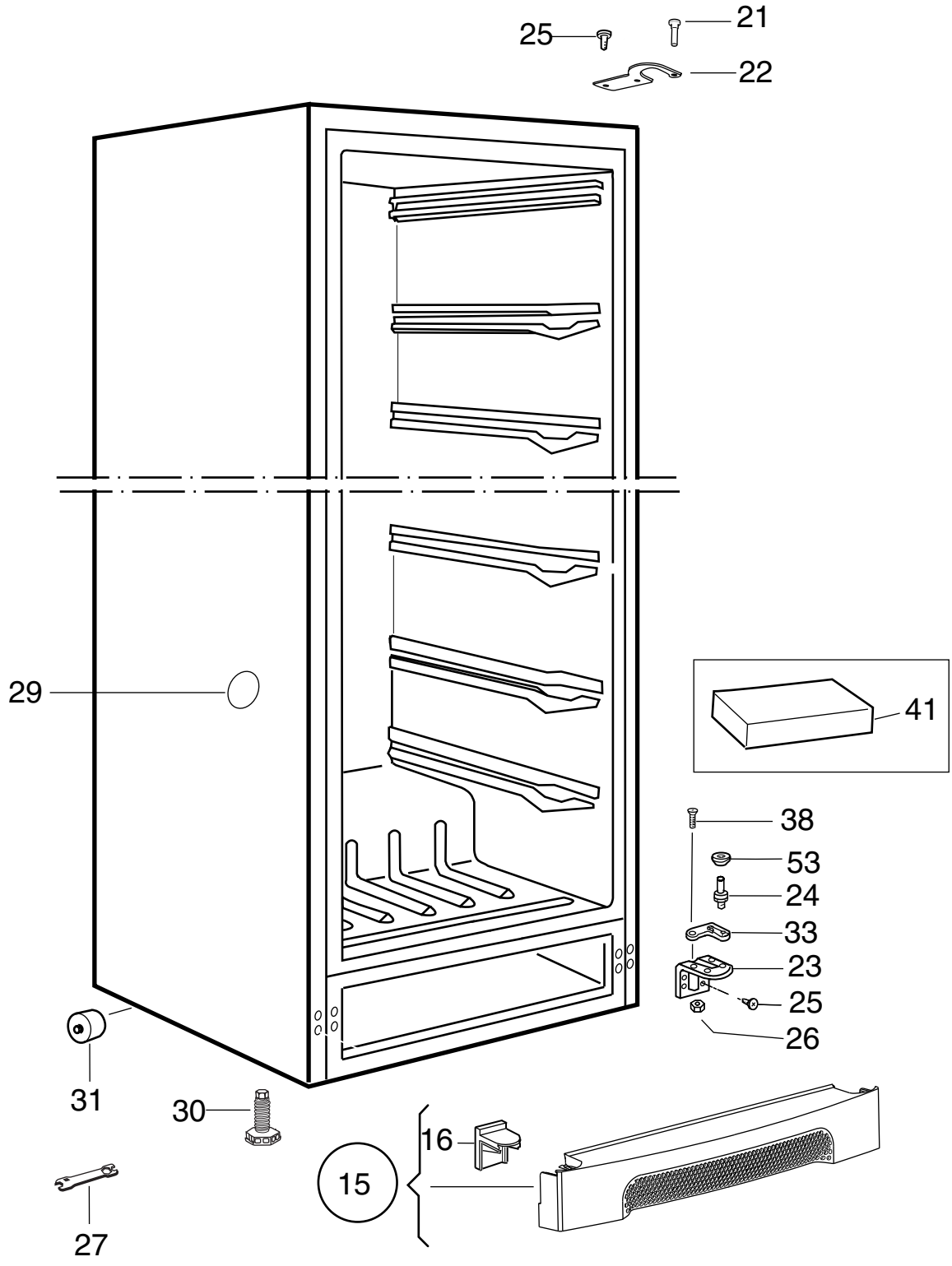

AN
NB9222058971